JOURNAL OF CORPORATE GOVERNANCE, INSURANCE AND RISK MANAGEMENT

ISSN: 2757-0983 (Online),
Volume 2 Number 3

JCGIRM JOURNAL OF CORPORATE GOVERNANCE, INSURANCE AND RISK MANAGEMENT

ISSN: (Online)
www.jcgirm.com

Published by:
Centar za istraživanje i razvoj upravljanja d.o.o.
CIRU - Governance Research and Development Centre
Kraljevićeva 6, 10000 Zagreb, Croatia
&
University of Malta, Faculty of Economics, Management and Accountancy
Department of Insurance, Room 218
Msida MSD2080, Malta

THE JOURNAL OF CORPORATE GOVERNANCE, INSURANCE AND RISK MANAGEMENT

This Journal replaces the former European Journal of Economics and Management (EJEM) first launched in 2014. The Journal is an international open-access refereed indexed journal, published twice Annually.

The aim of the Journal of Corporate Governance, Insurance and Risk Management (JCGIRM) is to publish quantitative and qualitative studies from selected areas within these disciplines and other related areas such as Banking, Accounting, Auditing, Compliance, Sustainability, Behaviour, Management and Business Economics.

The main scope of the journal is to spread original academic, theoretical and practical insights and studies about these fields to a national and international audience, with the widest reach and spectrum as possible.

The articles to be submitted should be in English. JCGIRM welcomes articles from different institutions and countries. All manuscripts submitted to the JCGIRM are sent to the referees after the initial review of the editorial board with respect to formatting and content. Manuscripts must be submitted in accordance with the style of writing specified in the book of "The Publication Manual of the American Psychological Association (5th edition).

Focus and Scope

The Journal of Corporate Governance, Insurance and Risk Management (JCGIRM) is a peer-reviewed online journal for scientists, researchers and academics involved in all aspects of Corporate Governance, Insurance and Risk Management to publish their original research and innovative applications. The journal welcomes high-quality original research papers, survey papers, case studies, review papers, tutorials, technical notes as well as the discussion papers in the field of Business Economics and Finance.

The Journal focuses on research articles presented in International Conferences offering publication opportunities in the form of collective volumes, in specific research fields, country analyses and groups.

The main sub-sectors considering for publication by the journal are:

- International Economics and Finance
- Insurance, Investments and Banking
- Risk Management
- Management Accounting and Audit Management
- Business Development
- International Financial Services and Portfolio/Asset Management
- Financial Analysis
- Regulation – Market, Insurance, Banking and Investment
- Risk Analysis
- Corporate Finance
- Financial Markets
- Monetary and Fiscal Policy Decision-Making
- Portfolio and Asset Management
- Risk Management in Real Estate and Health
- Corporate Governance
- Sustainability Risk Management
- Business Continuity and Crisis Management

Table of Contents

JCGIRM Journal of Corporate Governance, Insurance, and Risk Management (JCGIRM)
2015, Volume 2, Series 3

Pages 1-15

Union activity in subsidiaries of multinational corporations in Republic of Croatia

Najla Podrug[a,*], **Mario Filipović**[b], **Valentina Kuča**

[a]Faculty of Economics and Business Zagreb, University of Zagreb, J. F. Kennedy 6, 10 000 Zagreb, Croatia
[b]Fimar d.o.o. Split, Matice hrvatske 9/a, 21 000 Split, Croatia

ABSTRACT

Multinational corporations as the primary holders of foreign direct investments have a significant impact on the national economy with a well-developed and prepared institutional infrastructure, but they have even stronger impact on the transition economies and developing countries. Expanding into new markets, multinational corporations create new jobs; therefore unions have an important role in protecting employees' rights and their representation towards employers. The role of unions in the lives of all employees is even more noticeable because the situation on the labor market is extremely unfavourable and in many countries employees' rights are threatened. But researches also show that the proportion of union membership in the developed countries is decreasing, and also in developing countries and this trend has not bypassed Croatia. The aim of this paper is to investigate the role of unions in the subsidiaries of multinational corporations in Croatia. In more than half of the analyzed subsidiaries of multinational corporations we identified one hundred percent coverage of employees by collective agreements. We analyzed the most common reasons for joining the union and evaluated the relationship between unions and human resource management departments.

ARTICLE INFO

Keywords:
union, subsidiary of multinational corporation, union's activities, Republic of Croatia

**Corresponding author:*
npodrug@efzg.hr

Article history:

Article Submitted 14-04-2015
Article Accepted 20-06-2015

**Article previously published in EJEM 2015, vol 2, No. 3

1. INTRODUCTION

In today's global world, multinational corporations play a leading role in the development of the world economy. They are the drivers of globalization, liberalization, conglomerations, financial innovations, and new forms of financing. It is known that the developed countries are those that have the best basis for the development and operations of multinational corporations, but it's often the case that such corporations also choose developing countries or countries in transition as a place for the establishment of their new subsidiary. Due to the fierce competition that is present on today's market, the achievement of organizational goals is impossible without the joint efforts of employees and managers. Employers are becoming increasingly aware that the quality of their products and services on the market is not going to be possible without high-quality and satisfied employees. Also, employees have developed awareness of the fact that only hard work and education will lead them to the desired position

in the organization. Although it is beyond doubt their mutual need, their goals often differ, and collective bargaining is a method used to meet their different needs. That is a job of trade unions whose main purpose is serving the society with their work. It can be said that today's trade unions are focused on serving the public, development of society and civil values. They perform a number of tasks on a daily basis for the benefit of its members, but also meet the interests of the government, the country and the wider community. Basic service that unions provide to its members is ensuring adequate compensation and working conditions. The purpose of this study is determining the position of the trade unions and their specific activities in the subsidiaries of multinational corporations in the Republic of Croatia.

2. MULTINATIONAL CORPORATIONS AND UNIONS

The importance of large corporations goes beyond the framework of partial economic activity and they become a universal social phenomenon that affects all three dimensions of sustainable development: social, economic and environmental (Galetić, 2011, p. 6). According to the United Nations Conference on Trade and Development (UNCTAD), a multinational corporation is a company that is composed of subsidiaries in more than one country and operating under a system that allows coherent policy and decision-making. Subsidiaries are linked by ownership or otherwise so one of them or a couple of them can affect the other one, and in particular to lead to the exchange of knowledge, resources and responsibilities. Using internationalization, corporations expand their operations to other countries and when choosing a foreign market, the following criteria is considered: size and growth of the market, the existence of attractive consumer groups and the demand for products or services offered by a corporation (Rahimić and Podrug, 2013, p. 66.) If achieving efficiency is a motive for internationalization, then the election of the country where the production will be internationalized is based on the following criteria: the cost of production in certain countries, the distance from major markets (because it affects the cost of distribution), the possibility of integrating all processes into a single cross-border process and availability of resources and suitable suppliers (Dunning and Lundan, 2008, p. 72). Production costs can differ drastically. For example, labor costs in the production in Norway are 60% higher than the US average, and are fifty times higher than the costs in China. The first twelve countries in terms of the amount of labor costs in manufacturing are European countries, followed by the United States and Australia. It is interesting to note that the growth of employee income in the production is much faster in China and India than in the US,

however, it is still only 4% of average income in the United States (Rahimić and Podrug, 2013, p. 68).

Methods of expanding multinational corporations around the world are (Norbaeck, 2001, p. 455):

- horizontal integration - the opening of a subsidiary of the parent corporation in the world that produce the same goods or goods of the same product group, hence using the same technology and for the same consumer groups.
- vertical integration - subsidiaries abroad are suppliers of raw materials, where are parent corporation supplies them with factosr of production.
- diversification of multinational corporations - meaning the existence of a subsidiary of the parent corporation that produce goods different from those produced by parent corporation. It is usually carried out by acquisitions or mergers.
- conglomerations - opening branches abroad that produce goods or services belonging to other industrial sectors and there is no similarity with the parent corporation when it comes to technology, production, marketing and other.

By entering new markets, multinational corporations face many institutional constraints which are different depending on the country; therefore it is considered subsidiary strategies are becoming increasingly important for multinational corporations. When a multinational corporation enters new markets, its success is partialy determined by the possibility of transfering competitive technologies into the subsidiaries, which is often not easy (Dabić, 2007, pp. 29-42).

Foreign direct investment, besides transfering financial capital, include the transfer of modern technology and other intangible assets. In this way, foreign corporations can significantly affect productivity growth and long-term economic growth in the recipient country. This is the reason why direct investments of multinational corporations are considered one of the main channels through which developing countries gain access to the latest technologies which diffusion plays an important role in explaining economic growth (Bilas and Franc, 2006, p. 4).

By entering new markets, multinational corporations bring many positive and negative things. In bad times and situations multinational corporations are being pointed out because of their shortcomings, while in times of favorable situations only their their benefits are highlighted. As an institution, multinational corporation can be a positive force that has a good influence

on the economy or a negative force that is bad for the economy (Tripathi, 2005, pp. 117-131). The advantage of multinational corporations is reflected in the fact that they have many resources that help growth and development of certain countries. Some of these resources are already mentioned technology, management, know-how, skilled labor force, the international production networks, access to markets and well-known brands. Multinational corporations also promote development from a traditional point of view, increasing the level of investment and capital stock in the host country (Bilas and Franc, 2006, p. 6).

Multinational corporations may shift production to the country where laws are more lenient if laws of the certain country are too restrictive (Ćelić, 2000, pp. 14-15). It is known that multinational corporations open subsidiaries in those parts of the world which combine cheap labor and under-protected natural resources. This is the way that they exploit their power and set conditions that are not always favorable. The entry of multinational corporations into the market can inflict a heavy blow to domestic enterprises and cause them permanent damage. Additional costs for the national economy may result in reduced employment and for two reasons. One is the rationalization of the workforce in the acquired company, and the second reason is extrusion of unsuccessful domestic companies. Also, the emergence of corporations may lead to market deregulation in the form of development of oligopolies that reduce competition and free entrepreneurship. In addition, it can lead to compromising and diminishing the importance of national culture and national diversity of the so-called "world culture" in which the dominant position is occupied by customer value, expansion and deepening the gap between rich and poor countries, calling into question national sovereignty and endangering country autonomy. Furthermore, it can reduce the amount of "good" and increase the amount of "bad" jobs (differences in incomes among workers with the same skills or qualifications are changing due to foreign direct investment and the imperfections of the labor market). Looking at the macro level that will worsen the current account deficit of the host country if the corporation resulting from foreign direct investments imports more than it exports, for example, from their headquarters abroad (Bilas and Franc, 2006, p. 6).

Unions are legally regulated institution established by employees to represent them in the complex economic and legal relationships with employers and government (Clawson, 1999, p. 109). According to the Croatian Labour Law (2014) for the establishment of trade unions there has to be a minimum of ten adult persons with legal capacity. A worker who is a trade union must be in the same situation as the one that is not in the union. It follows that it is expressly forbidden (Labour Act, 2014): assembling an employment contract with a worker

on condition that he would not join an union, i.e. on condition that he leaves an union or cancelling the contract or otherwise put workers in a less favorable position than other workers because of his union membership or participation in union activities outside working hours, and with the consent of the employer and in time of the working hours. A worker who is a union member has the obligation to pay membership fees. It has to be calculated and withhold from the employee's salary by the employer for the account of the union.

The most important areas trade unions affect are (Marić and Pološki Vokić, 2012, p. 15):

- economic conditions - equitable distribution of wages and benefits,
- working conditions - ensuring humane working conditions relating to hours of work, equal opportunities for all workers, safety and health in the performance of work,
- participation in decision making - enabling employees to participate in decision making,
- society - through a fair tax policy and social transfers commitment to a fairer distribution of wealth.

The role in society is very important area for union activity today. Their main purpose is to serve society through their work. It can be said that today's unions focus on serving the public and the development of society and civil values. The process of trade union action is the following: they invest the resources (financial and human) in order to resolve conflicts between employers and workers and provide other services to the membership, and it is a prerequisite for attracting new members.

Unions are complex organizations that perform a number of tasks on a daily basis for the benefit of its members, but also meet the interests of the government, the country and ultimately the wider community. To satisfy all interests, activities carried out by unions can be classified into four basic groups (Independent Union of Research and Higher Education - NZS):

- union political activities - the management and implementation of trade union policy, negotiations on wages and collective agreements, initiating and planning of trade union action, representation, managing intraunion policy, international cooperation;
- administrative-managerial activities - management of the union, management of the secretariat, managing people and working with personnel, operations of monitoring and evaluation (management of the organization), extraordinary activities (periodical

jobs and projects, strikes, protests) and regular activities (organizing work of the body, care for affiliates and members in the secretariat, conduct of business);

- professional activities - legal, economic, informing, propaganda and IT;
- executive jobs - executive and organizational duties, material and financial affairs, auxiliary, technical, administrative, IT.

After the establishment of the union, it is very important to communicate in order to attract new members. Today it is very difficult to recruit new members into the union. The most common reason is ignorance and lack of information. Experts in this field believe that it is necessary to inform young people who are in the process of job search (Hernaus, 2012, pp. 39-40).

After new members join the union they need to be kept in there. Nowadays that is a complex job that involves detailed introduction of the new members with the objectives and activities of unions. The recommendation is having an orientation program which directs new members in details to the goals and values of the services and activities offered by unions. They should also be represented to the union representatives responsible for individual segments of activity. This whole process is called socialization of new members and, if well implemented, it increases the chances that the new members remain in the union.

Table 1. The benefits for union members and the organization

BENEFITS FOR UNION MEMBERS	BENEFITS FOR ORGANIZATION
higher wages and benefits	greater work effort and work performance
higher safety and health on work	a better relationship with customers
better communication between employees and management	greater employee involvement in decision-making related to organizing and carrying out the work
participation in decision making	greater loyalty and organizational commitment
higher job satisfaction, motivation and employee moral	lower fluctuation rates and absenteeism of employees
greater satisfaction with resolving complaints	better management
more additional training, education and development	better quality of products/services
better standard of living and better quality of life	higher productivity, profitability and organizational effectiveness, hiring the best employees because of the desirability of employer

Aim of the unions is achieving good working conditions for workers. This is the reason why they increasingly conflict with employers who are aimed at profitability maximization. The ideal relationship between them would be a partnership from the start, but it is only the final result which is formed after the conflict that is very common among them. The reasons for conflict vary, but they all boil down to the fact that employers and trade unions, as workers' representatives, have conflicting requirements. Finding resolution includes three parties: labor unions as representatives of workers, employers and the country.

The unions operate through collective agreement, at the level of organization, on the compensation of employees. The most important result of their negotiations is the growth of wages. These are followed by the rest of the results of the negotiations: wages equality, defining compensation structures and payment systems, establishment of a unified salary structure, fairness in rewarding employees and increase of the number and value of benefits.

Research shows decreasing proportion of union membership in the developed countries but also in developing countries as well as those emerging from communism. This trend has not bypassed Croatia. The consequences are privatization, restructuring and reducing the number of employees in the public and an increase in the private sector. In fact, once the union membership was mandatory, and today is voluntary and it is the main reason for reducing the number of people in unions. The economic crisis that striked the world, including Croatia, led to unfavorable changes in the negotiation process. The goal became maintain jobs, and in accordance with that unions and workers needed to be more flexible in the arrangements. It also revived the question of minimum wages because employers have increasing costs, on the other hand, the law which stipulates the obligation of payment of the minimum wage.

According to the official records of the Ministry of Labour and Pension System, in Croatia's state administration offices at the county level in late July 2015, there were 314 registered unions. Significantly stands out Split-Dalmatia County with 95 unions, followed by Primorje-goranska with 33 unions and Virovitica-Podravina with 23 unions. The city of Zagreb has 42 registered unions. Regional differences are the result of, on the one hand the difference in the development of the economy and the number of larger businesses, but apparently also some other factors such as the level of union awareness and involvement of union leaders.

Trade union confederations in Croatia representative to participate in tripartite bodies at the national level are (NN, 2013):

- Independent Croatian Trade Unions
- The Alliance of Independent Croatian Unions
- Association of Croatian Trade Unions
- Croatian Association of Trade Unions

Table 2. Number of affiliated unions in the union bisector in the Republic of Croatia

UNION BISECTOR	NUMBER OF AFFILIATED UNIONS (2015)
Independent Croatian Unions	66
The Alliance of Independent Croatian Unions	23
Association of Croatian Trade Unions	11
Croatian Association of Trade Unions	60

3. EMPIRICAL RESEARCH ON UNION ACTIVITIES IN SUBSIDIARIES OF MULTINATIONAL CORPORATIONS IN THE REPUBLIC OF CROATIA

Empirical research on the role of unions in multinational corporations in the Republic of Croatia was conducted among union officials and union members employed in subsidiaries of multinational corporations in the Republic of Croatia. The survey instrument was a questionnaire that enabled the collection of data on union activities in those corporations. The sample was made from employees of subsidiaries of multinational corporations operating in the Republic of Croatia who are union members or union representatives in that subsidiary of multinational corporation, and who also conduct union activities, are knowledgeable of the area and have access to the data required for the fulfillment of the relevant questionnaire. The questionnaire was sent to the address of union representatives in the subsidiaries of multinational corporations in the Republic of Croatia and the total collected completed questionnaires were 21.

95.2% of respondents are representatives of unions in the subsidiary of multinational corporation in which they work, and more than half of them are involved in the subsidiary union more than ten years. 38.1% of union officials account for more than 32 hours a month in union activities. They are followed by those who spend more than 8 hours making 23.8%, while 19% of them spends 4-8 hours or less than 4 hours to union activities.

Analysis of industries in which subsidiaries of multinational corporations operate is shown in Table 3. Most of the respondents included in the survey work in the subsidiaries of multinational corporations in the manufacturing industry and trade.

Table 3. The industry in which the subsidiary of the multinational corporation operates

INDUSTRY	NUMBER OF MULTINATIONAL CORPORATION SUBSIDIARIES
manufacturing industry	5
wholesale and retail	5
mechanical engineering	2
civil and construction engineering	2
mining	1
agriculture	1
metal industry	1
pharmaceutical industry	1
beverage industry	1
machine industry	1
gaming industry	1

Research has shown that the unions have been operating for many years in the subsidiaries of multinational corporations. Of all the respondents exceptions are two corporations, and the reason is actually their late arrival to the Croatian market. The maximum annual rate of accession of new members is 20% present in only one corporation, while in others the rate moves below 10%, and is usually 1-5%. Four corporations have 80-90% of employees involved in the union, while the two corporations have only 0-10% of included employees.

"According to the Croatian Labour Law of 2014, the collective agreement determines the rights and obligations of the parties that have concluded this agreement, and may include legal rules by which are determined conclusion, content and termination of labor relations, social security and other issues arising from employment or in relation to employment." In more than half of the subsidiaries of multinational corporations coverage of employees by collective agreement is 100%. But there is the other extreme, where the coverage of employees by collective agreement is 0-10%.

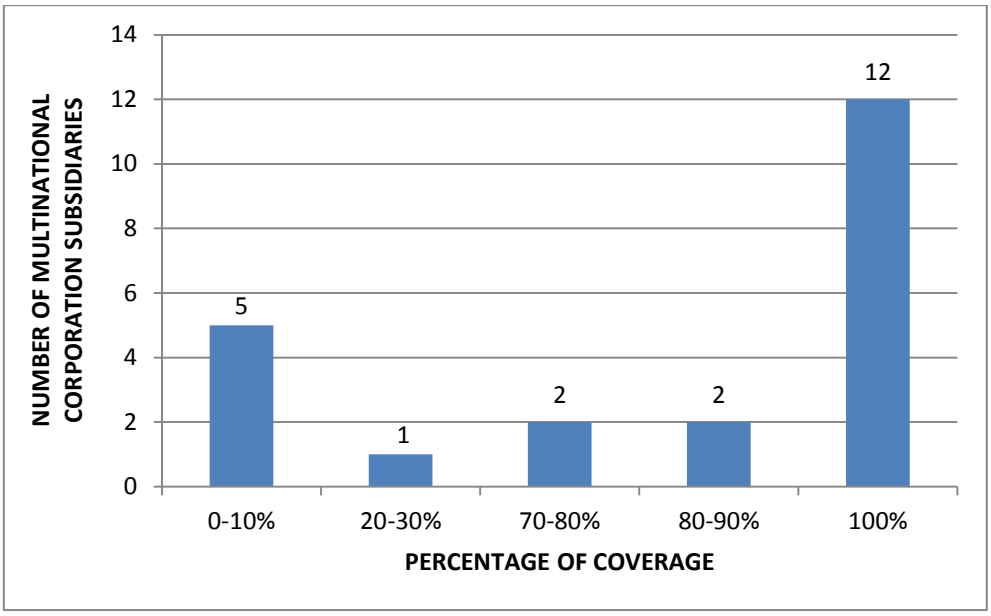

Chart 1. The coverage of employees by collective agreement

From the analysis of the benefits that employees have from accessing union it can be concluded that the majority of employees have economic (unions negotiate wages, benefits, etc.), psychological (result from the sense of belonging to the group and influence on decision making) and social benefits (as a result of community among members).

The union can promote itself verbally (communication with colleagues - "face-to-face" in the workplace and outside) and in writing (leaflets to join, magazines, website, e-mail, publication in a newspaper) or a combination of the two methods. In 57.1% of the analyzed union promotion is conducted verbally, in writing 14.3%, while the combination of verbal and written is used by 28.6% of the unions.

Table 4. Areas covered by collective agreement

AREA	THE PERCENTAGE OF COVERAGE BY COLLECTIVE AGREEMENT
paying and rewarding and working time	85.7%
health and safety at work	81%
work environment and work standards	57.1%
education and development	47.6%
disagreements at work	42.9%
job security	38.1%

recruitment, promotion and dismissal	28.6%
health and pension insurance	14.3%

Unions provide a variety of additional services, and the most common are the following: 95.2% of them provides advisory services (legal advice, psychological support, etc..), 61.9% provide reaction services (organizing sports recreation, union sports games), 57.1% financial services (union savings, union loan, recompense for unemployment in the period between two jobs), 52.4% social and cultural activities (regular meetings, joint celebration of holidays and public holidays), 19% services related to holidays (union resorts, organizing tours and trips), 14.3% services related to the health of members (check-ups, discounts for health insurance) and 4.8% further education (retraining, specialization, etc.).

The most common reasons for joining an union are existential (higher wages and benefits, better working conditions, social protection, job security, etc.), social reasons (a belief in the unions, social pressure, the individual needs to be accepted and part of a group) and the provision of additional benefits (developing knowledge and skills through educational programs organized by unions, self-fulfillment, free legal advice, etc.).

Lack of confidence in the unions as an organization is a reason for not joining unions in 47.6% of cases. The second reason is ignorance of the purpose and existence of unions, lack of conviction about the validity of syndicalism as an idea, social pressure on non-membership. There are employees who do not have any particular reason why they do not want to be in the union (passive non-accession), and there are those who have clear reasons why they are against joining the union (active non-accession). Nowadays the more common cause of passive non-accession is the fact that collective agreement applies to all employees.

The union can consist of various services. The survey showed that 85.7% of the analyzed unions in subsidiaries of multinational corporations have union office, while the secretariat and professional and administrative service are represented in the minor quantities. As a part of the technical and administrative services different departments can be set up. Most unions have a legal department, collective bargaining department and the department of finance.

In 38.1% subsidiaries of multinational corporations there is a coexistence of unions and human resources management, according to which the union and the departments of human resources management function in parallel, but their activities do not intertwine or overlap. Synergy of unions and human resources management is present in 28.6% of subsidiaries of

multinational corporations. It implies a common care for employees and cooperation of unions and the department of human resources management. This model is the best for the employees because it creates a high-quality working environment. There are corporations where employee care is the duty only of unions or only of departments of human resources management.

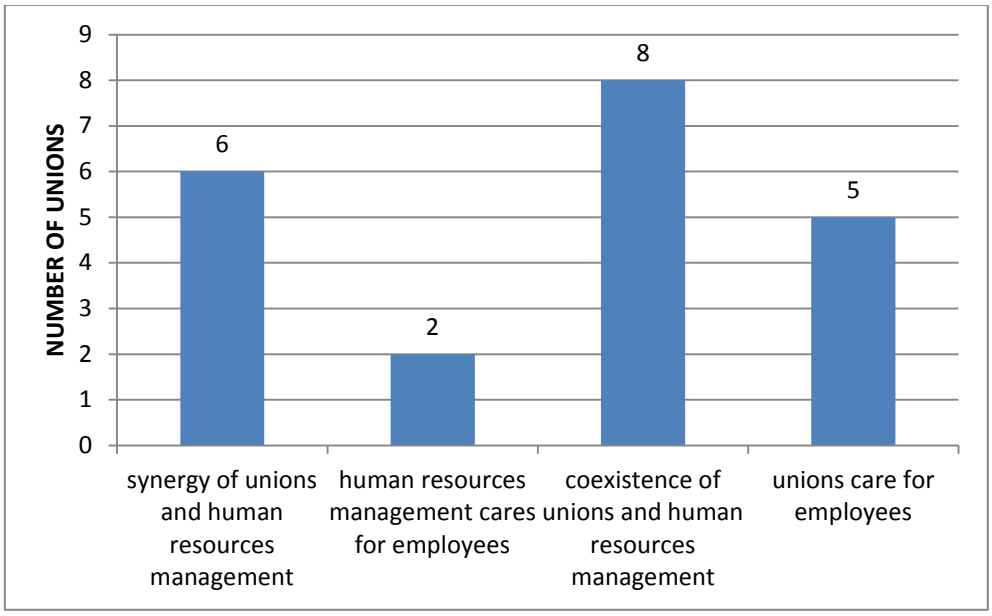

Chart 2. The relationship of union and human resources management

Most respondents believe that more activities customized to young people (social and cultural events, excursions) would contribute to increase of youth participation in the union. They also consider a necessity of promotion of unions, increase of communication with young people through social networks (Facebook, Twitter, etc.) and rejuvenation of leadership. As for the rejuvenation of management, they find necessary connecting the knowledge of older members and new ideas and perspectives of young union members and thus increasing the interest of young people in the union.

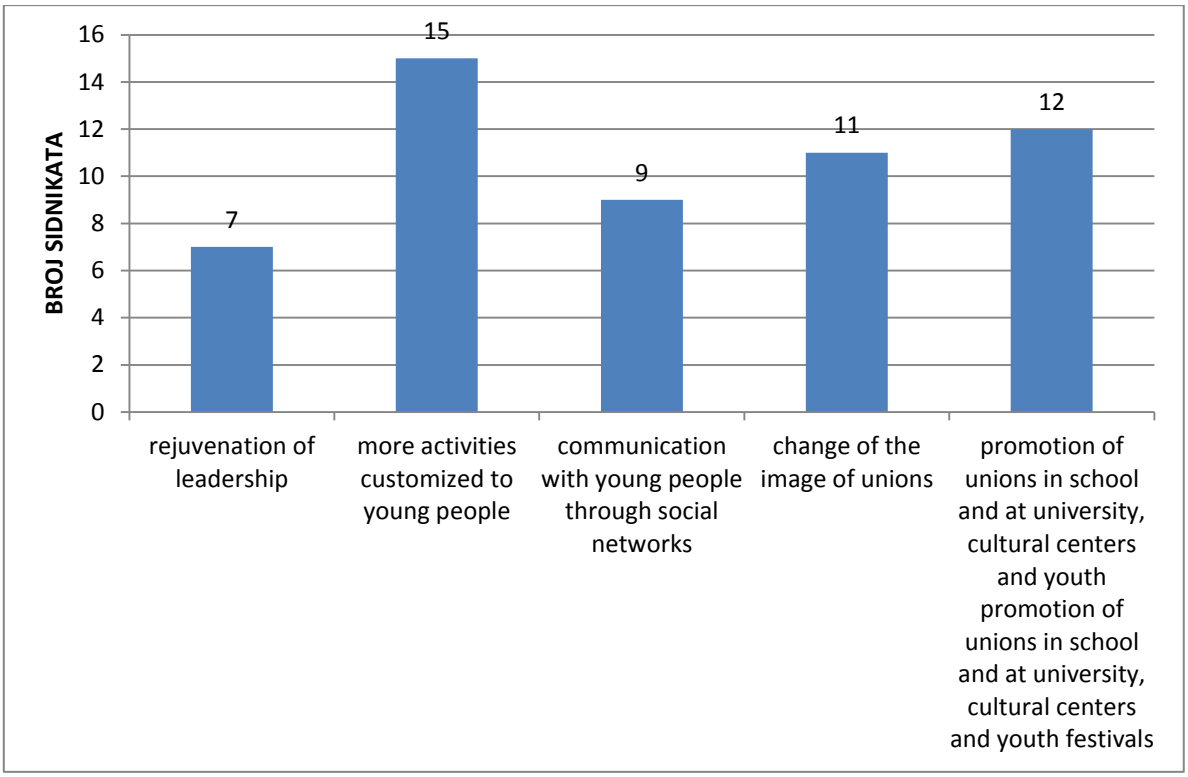

Chart 3. Changes that would contribute to increase of youth participation in the union

In conclusion, the respondents believe that there is a lack of young people involved in the union. The reason for this situation is the lack of information and ignorance of youth when it comes to unions. In order to change the current situation it is necessary to carry out more activities tailored to the youth, introduce education in final years of the high school and college, and change the union image and way of communicating with youth.

4. CONCLUSION

Multinational corporations are willing to transfer technology to the countries in transition and less developed countries and thus help them, but also provide itself with a competitive advantage and higher profits. They are the holders of foreign direct investment, and they are particualarly important for relations between the global and national elements. Croatia represents more and more attractive place for direct foreign investments, i.e. multinational corporations. Due to the fierce competition that is present on today's market, the achievement of organizational goals is impossible without the joint efforts of employees and managers. Employers are becoming increasingly aware that the quality of their products and services on the market is not going to be possible without high-quality and satisfied employees, and

considering that number of employees is too big to negotiate on their own behalf, they are associating in the unions who are their representatives.

This empirical research is of pioneering character and raises many questions for future research. Certainly, more extensive research with a larger number of subsidiaries of multinational corporations in the Republic of Croatia would provide a clearer picture of the status and role of unions. It would also be interesting to make a comparison of the activities of unions of Croatian companies and subsidiaries of multinational corporations in the Republic of Croatia. Future research should analyze unions of one selected multinational corporation as well as the activities of unions in its subsidiaries around the world. It would certainly be useful to involve other stakeholders in the research, such as employees in order to perform various other conclusions on the work of unions and their role in the lives of employees.

REFERENCES

Bilas, V., Franc, S. (2006), „Uloga inozemnih izravnih ulaganja i načini poticaja“, Serija članaka u nastajanju, December, pp. 4-11.

Clawson, D., Clawson, M. A., (1999), „What has happened to the US labor movement? Union decline and renewal“, Annual Review of Sociology, Vol. 25 No.1, pp. 95-119.

Ćelić, M. (2000), Multinacionalne kompanije i ekonomska integracija, Ekonomist, 7/8, pp. 14-15.

Dabić, M. (2007), Uloga multinacionalnih kompanija u promicanju tehnološkog razvoja zemalja u tranziciji, Zbornik Ekonomskog fakulteta u Zagrebu, Vol. 5 No.1. pp. 29-42.

Dunning, J., Lundan, S. (2008), Multinational Enterprises and the Global Economy, Second edition, Edward Elgar Publishing, Cheltenham

Galetić, L. (2011), Organizacija velikih poduzeća, Sinergija, Zagreb

Hernaus, T. (2012), „Cost-benefit sindikata na mikrorazini“, in: Pološki Vokić, N., Obadić, A. (ed.), Evolucija sindikata: uloga sindikata u suvremenome društvu, Ekonomski fakultet, Zagreb, pp. 81-96.

Hernaus, T., Pološki Vokić, N. (2012), „Dnevni red sindikata“, in: Pološki Vokić, N., Obadić, A. (ed.), Evolucija sindikata: uloga sindikata u suvremenome društvu, Ekonomski fakultet, Zagreb, pp. 37-66.

Marić, I, Pološki Vokić, N. (2012) „Sindikati kao organizacija civilnog društva“, in: Pološki Vokić, N., Obadić, A. (ed.), Evolucija sindikata: uloga sindikata u suvremenome društvu, Ekonomski fakultet, Zagreb, pp. 13-36.

Narodne novine (2014.) „Zakon o radu“, Vol. 93, No.14, pp. 42.

Norbaeck, P. J. (2001), Multinational firms, tehnology and location“, Journal of International Economics, Vol. 54 No. 512, pp. 449-469.

Rahimić, Z., Podrug, N. (2013), Međunarodni menadžment, Ekonomski fakultet u Sarajevu, Sarajevo

Tripathi, S. (2005), International Regulation of Multinational Corporations, Oxford Development Studies, Vol.33 No.1, pp. 117-131.

JCGIRM Journal of Corporate Governance, Insurance, and Risk Management (JCGIRM)
2015, Volume 2, Series 3

Pages 16-33

Destination Competitiveness Analysis for Creative Crafts Industries in Bantul Yogyakarta Indonesia

Ratna Roostika[a,*], **Tri Wahyuningsih**[b], **Sigit Haryono**[c]

[a]Department of Management, UPN 'Veteran' Yogyakarta
[b]Department of Management, UPN 'Veteran' Yogyakarta
[c]Department of Management, UPN 'Veteran' Yogyakarta

ABSTRACT

Escalating competition among destinations has become more obvious. Shopping for handicrafts is one of important activities in tourism. Handicraft industry is a low technology, labor intensive, and run dominantly by small medium enterprises (SMEs). Handicraft industry is one of creative industries sector in Indonesia that promises to accelerate the growth of the Indonesian economy. To remain competitive, understanding on the competitive nature of handicrafts market need to be continuously monitored and adjusted to SMEs strategies. Using partial least squares path modeling on a cross-sectional sample of 54 SMEs owners in Bantul Yogyakarta, this study examines relationships among factors of destination competitiveness with clusters competitiveness and socio-economic welfare. The predictors assessed include given resources, created resources, related-supporting factors, demand conditions and strategy-structure-rivalry. Results indicate that supporting factors and strategy-structure-rivalry are not significantly impact on cluster competitiveness. The new final model was found that clusters competitiveness mediates the relationships between three destination competitiveness factors and socio-economic welfare. This study enriches theories on destination competitiveness, particularly in assessing clusters as the object of the study. The results are also important for policymakers in strengthening destination competitiveness strategy.

ARTICLE INFO

Keywords:
SMEs, creative industry, destination competitiveness, economic prosperity

**Corresponding author:*
roostika12@gmail.com

Article history:

Article Submitted 14-04-2015
Article Accepted 20-06-2015

**Article previously published in EJEM 2015, vol 2, No. 3

1. INTRODUCTION

Since oil and gas exports have decreased in 90th era, Indonesian Government expects to boost exports from non-oil and gas industry including creative industries. Creative industry is now an important sector due to its growth rate, capability to generate significant income, and in providing job. Creative industry in Indonesia has grown at an average rate of GDP up to 9% or amounting US$ 58.5 per year (thejakartapost 2014). There are 14 sub-sectors in Indonesian creative industries and some of them include handicraft, arts and antique markets, performing arts, movie, fashion, game, culinary, and designs. The growth of creative industry is highly influenced by the current advanced in technology, globalization as well as the increase in global income. More people are entering into middle level of income thus they have better access to education, technology as well as they are more mobile. The increase of global welfare gives engine to the growth of creative industries.

The growth of creative industries in Indonesia cannot be separated from the growth of tourism sector as a sector which provides the biggest market for selling creative products and services. When

tourism sector is leading, tourism shopping as part of tourism activities will also flourish, generating multiplier effects to other sectors including creative industries. Tourism competitiveness or destination competitiveness refers to not only economic competitiveness, but also to social and cultural aspects of the nations (Kim 2012). Destination competitiveness can also lead to long-term sustainability and sustain standard of living to the designated area (Crouch & Ritchie 1999). Handicrafts industry as part of the creative industries is one among important activities that tourists always spend during their visits. The competitiveness of the handicrafts sectors is vital for sustainability of the destination competitiveness. To maintain the level of competitiveness, handicrafts industries which commonly operate by Small Medium Enterprises (SMEs) should always aware of the level of global competition and aware of their internal capability to compete. In this very dynamic era and globalization, market changes rapidly. Thus appropriate competitive strategies are necessary to stay in the unpredictable market.

Since Porter's introduction to the diamond model in his book *The Competitive Advantage of Nations* (Porter, 1998), studies on destination competitiveness (e.g. Dwyer & Kim 2003; Gursoy, Baloglu & Chi 2009; Lee & King 2009) have been flourishing to explain how tourism industry can stay competitive. Porter points out that abundant natural resources or cultural resources are not guarantee for winning tourism industry. In reality, countries like Switzerland and Singapore with less natural resources are rank high as recorded in Travel and Tourism Competitiveness Index (TTCI) compared to developing or less-developed countries with plenty cultural and natural beauties.

The ultimate goal of the nations' economic development is the increase of their people welfare. By studying the SMEs handicraft industry in Bantul Yogyakarta, The purpose of this research is to build a destination competitiveness model to help local policy makers to understand more on their relevant competitive factors given their unique local resources. This study also aims to answer the question by investigating the impact of competitive factors as identified by Porter namely given resources, created resources, related-supporting resources, strategy-structure-rivalry, and demand conditions to clusters competitiveness. Further, this study also aims at answering how clusters competitiveness impacts on socio-economic welfare.

2. CREATIVE INDUSTRY IN BANTUL YOGYAKARTA

The growth of creative industries provides optimism to accelerate the growth of the Indonesian economy. This sector has 14 sub-sectors that have been able to contribute significantly to the Indonesian economy. In 2004, creative industries achieved the highest growth with record 8.17 percent. This achievement was noted exceeded the average national economic growth which was only 5.03 % (Pangestu 2008). The significant performance of creative industries in Indonesia was shown by the value of exports in 2006 amounted Rp 81.4 trillion and this number accounted for 9.13% of the total national export value (Nurani 2014). In terms of work force market, this sector is able to absorb

the labor force on average of 5.8% from 2002 to 2006. Handicrafts as a sub-sector of creative industries ranks the second largest value of GDP contribution (25.51%), employment (31.07%), number of exporters (33.02%,) and export (32.44%) (Viva 2010).

Yogyakarta is one of major tourist destinations in Indonesia. This province known as special region of Yogyakarta (DIY) has many ancient cultural heritages, beautiful beaches, and a spectacular active volcano. Local way of life and culture are of unique potentials for regional development, especially in the tourism industry. In addition, the city of Yogyakarta carries a number of unique attributes such as quality of education, quality of crafts makers, and quality of artists. Not only Yogyakarta is important destination for international visitors, but also Yogyakarta has a strong magnet for Indonesians to learn knowledge and culture. Lead by Sultan of Yogyakarta, he creates an atmosphere where creativities can be openly flourished. This special atmosphere motivates the birth of many artists and many cultural products that attract many Indonesians and foreigners to come to Yogyakarta. Similarly, creativities in handicrafts productions are also receives positive atmosphere to develop. It is therefore, when thinking of finding special handicrafts that represents Indonesia, many have suggested to find them in Yogyakarta.

More specifically, Bantul is one of Yogyakarta's Regencies located in southern part of Yogyakarta Province. Bantul has benefited from the success of Yogyakarta tourism sector. The local government noted a very successful category for the number of local tourists visit realization (see table 1). However the realization for overseas tourists' visit was not considered successful as in year 2013. Regardless the number of overseas visitors, Bantul contributes to 80% of Yogyakarta total crafts export (Sujatmiko 2013). The majority of Bantul residents work as artistic craftsmen including pottery, bamboo hand fan, batik material, wooden batik, leather, natural fiber accessories, etc. Many of them are lack of knowledge for new technological usage in handicrafts industry and they are likely to maintain the traditional productions. On the other hand, the younger generations have quite responsive to the globalization and have adapted to the new demand and technology. But they do not have much interest working as handicrafts entrepreneurs as their future career. Handicrafts producers are dominantly SMEs and thus very vulnerable to global competition. Proper policies and strategies are vital for handicrafts SMEs to stay competitive.

Table 1. Tourism Performance in Bantul

	Performance Indicator	Realization 2011	Realization 2012	Target 2013	Realization 2013	Achievement Value (%)	Category
1.	local/national Visitors	1.738.808 Visitors	2.340.081 Visitors	1.649.462 Visitors	2.153.404 Visitors	130,55	Very successful
2.	Overseas Visitors	17.654 Visitors	16.497 Visitors	16.661 Visitors	2.153 Visitors	12,92	Not sucessful

Source: Lakip 2013 Bantul

3. DESTINATION COMPETITIVENESS

Any industry that does not maintain its competitiveness will be difficult to survive. Competitiveness issue has becoming more pronounced after Porters book of Nation Competitive Advantage. Porter in his book focuses competitiveness at the macro level. His concept is also applicable to regional, industrial and cluster level. Competitiveness itself according to Hughes (1993) is about efficiency and trade performance (market shares). The Organization for Economic Co-operation and Development (OECD) defines competitiveness as "the degree to which a country can, under open market conditions, produce goods and services that meet the test of international markets, while simultaneously maintaining and expanding the domestic real incomes of its people over the long term" (OECD 1992, p. 237). Competitiveness is capability in integrating productivity, efficiency, and profitability, for the purpose of higher standards of living and social welfare (Kim 2012).

The concept of destination competitiveness has evolved from competitiveness in the tourism sector. Destination competitiveness is the ability of a destination to deliver goods and services that perform better than other destinations (Dwyer & Kim 2003). Starting in around 1990s, in tourism context, a growing number of tourism researchers has put attention on destination competitiveness (e.g. Crouch & Ritchie 1999; Dwyer & Kim 2003; Gooroochurn & Sugiyarto 2005, Gomezelj & Mihalic 2008). The most comprehensive work on Destination Competitiveness (DC) has been conducted by Crouch and Ritchie (1999). Crouch and Ritchie (1999) conceptual model was built based on Porter's "diamond of national competitiveness". Crouch and Ritchie DC model was then known as *The Competitive Destination: A sustainable tourism perspective* (RC's model) (Kim 2012). Crouch and Ritchie contribution in their model was in the comprehensive and multidimensional way of DC model that includes societal prosperity in a global world. Dwyer and Kim (2003) additionally also suggest an "integrated model" which represents determinants and indicators of destination competitiveness. Dwyer and Kim (2003) model (DK's model) combine the main elements of Porter's national competitiveness model and the main elements of destination competitiveness from RC's model. DK's model includes inherited resources, created resources, supporting –related resources, destination management, situational conditions and demand conditions. Further, DK's model also involves socioeconomic prosperity as output of destination competitiveness.

Since the work of RC's model and DK's model, a number of studies on DC have increased significantly (Kim 2012). This research is a combination of competitiveness theory model (Porter, 1990) and DK's model. More specifically, this study adjusts the model of DC in Indonesian tourism sector into handicrafts sector. Handicrafts clusters are used as competitive destinations since the clusters are intensively visited by both tourists and traders. The theory of destination competitiveness should logically applicable for handicrafts clusters competitiveness.

The focus of this study is similar to common study in DC model that is building a model to explain how a handicrafts village can improve cluster competitiveness by examining the factors as identified by Porter and DK's model. The predictors that are built from Porter and DK's model are as follow:

Given Resources: The given resources represent more on the main factor conditions that attract visitors/buyers in the clusters. As the main raw material resources, it is a critical factor in creating handicrafts products. This consists of natural and cultural resources, such as Human resources (qualification level, cost of labor, commitment etc.) and material resources (natural resources, vegetation, space etc).

Created Resources: The created resources are more dealing with endowed resources such as government facilities, infrastructure, transportation, telecommunication, training, special events or festivals, entertainment, shopping and marketplace. This resources are manmade, thus competitiveness cannot rely merely from comparative advantage. A competitive move by actively building manmade facilities to support the abundant natural and cultural resources should improve the performance of the clusters.

Supporting/Related Industries: Is the industries that add value to given resources and created resources. Supporting/related resources cover industry that complement the handicrafts industries such as hotel and accommodation, culinary, travel transportation, entertainment, training and education, and other industries. The growth of supporting/related industries may influence the demand on the handicrafts industries even though supporting industries are not the main value in the handicrafts value chain.

Demand Conditions: Demand conditions describe the attractiveness of home demand for products and services produced in the regions/destinations/nations. Home demand may influence the quality, innovation and competition on the industry. Porter (1990) argued that, home demand is determined by three following characteristics namely: the mixture (the mix of customers needs and wants), the scope and growth rate, and the mechanisms that transmit domestic preferences to foreign markets (Kim 2012). A country can achieve competitive advantages in an industry when clearer and earlier signals of home demand trends are shown to domestic suppliers than to foreign competitors (Porter 1990, Kim 2012). Normally, the influence of home demand is higher than overseas demand in affecting organization's ability to compete.

Strategy-Structure-Rivalry: The activities by government, industries, and communities that can enhance the appeal of the main resources, strengthen the related and supporting industries, and demand conditions. This factor includes policy, safety, protection, and degree of overcoming rivalry. Porter (1990) defined strategy-structure-rivalry as the conditions that determine the ability of the companies to establish, organize, manage, and to determine the characteristics of domestic competition. Relating to strategy-structure-rivalry, cultural aspects play an important role. Different places have different cultures and thus management style. Factors like management structures, working morale, decision making, and people interactions are shaped differently in different places. Culture can cause advantages and disadvantages for industries' competitiveness. The nature of industrial ownership and control, including the family-business based industries that are commonly associated with SMEs determine the specific nature of strategy-structure-rivalry.

Clusters Competitiveness: Ketels (2015) defines that clusters is regional concentrations of economic activities with a set of industries related linked by different types of networks. Clusters as define by Porter (1990) is 'geographic concentration of inter-connected companies and institutions working in a common industry'. Within clusters, there are arrays of collaboration and competition of services and providers that create unique infrastructures. Clusters might also be associated with a specific type of competitive behaviors (Ketels 2015). Regions with a strong presence of clusters are more likely to success in achieving economic growth or GDP benefits as compared to region without clusters. Competition based on quality and unique values in clusters triggers production processes that are more focused on efficiency (Ketels 2015). Clusters and competitiveness are conceptual frameworks used to analyze the differences in economic performance across locations. Dynamic clusters contribute to a location's competitiveness. Clusters thus provide important information to understand and diagnose the drivers of a location's economic performance. Similar to destination competitiveness, clusters competitiveness can be defined as the ability of a cluster to deliver goods and services that perform better than other destinations.

Socio-economic prosperity: Socio-economic prosperity is defined as the social 'welfare' or 'well being'. The Socio-economic prosperity includes economic prosperity as well as the quality of life of residents in the regions/clusters. The success of clusters should provide more job and activities that enable to increase local income and buying power. The community around will be more dynamic and the investors will be more attracted for building better infrastructures and public facilities.

By applying the combination of Porter's and DK's model of Destination Competitiveness, this study will assess the relationships between Determinant of destination competitiveness, clusters competitiveness and socio-economic welfare. The above discussions form the basis for the following hypotheses:

Hypothesis 1: A significant positive relationship exists between given resources and clusters competitiveness.

Hypothesis 2: A significant positive relationship exists between created resources and clusters competitiveness.

Hypothesis 3: A significant positive relationship exists between related-supporting conditions and clusters competitiveness.

Hypothesis 4: A significant positive relationship exists between demand conditions and clusters competitiveness.

Hypothesis 5: A significant positive relationship exists between strategy-structure-rivalry and cluster competitiveness.

Hypothesis 6: clusters competitiveness mediates the relationships between destination competitiveness factors and socio-economic welfare.

4. RESEARCH METHODOLOGY

This study tests the structural model explaining the relationship between destination competitiveness, clusters competitiveness, and socio-economic welfare. The main determinants of destination competitiveness were built based on Porter's diamond framework. To assess the structural relationships, Structural Equation Modeling (SEM) with latent variables, specifically Partial Least Square (PLS) path modeling, is employed.

4.1. Data Collection and Analysis Tools

In order to be able to analyze the structural model, quantitative research is applied. Data were collected by survey to SMEs owners in Jipangan, Bantul Yogyakarta. The questionnaire was developed consisting of a total of 32 questions. Five questions were designed to evaluate given resources, five questions were for created resources, five questions for related- supporting industries, six questions were for demand factors, and five questions were for strategy-structure-rivalry. All questions to measure given resources, created resources, demand conditions, supporting-related industries and strategy-structure-rivalry were taken from Crouch & Ritchie (2003), Dwyer & Kim (2003), and Kim (2012). Five questions for clusters competitiveness were developed from Mena (2006). Six questions on socio-economic welfare were developed from Kim (2012). A five-point Likert scale was used as scaling method.

4.2. Statistical Population and Statistical Samples

Statistical population of the study consists of all SMEs producing handicrafts residing in Jipangan Bantul Yogyakarta. Out of 75 questionnaires distributed, 54 questionnaires were valid and reliable to use as valid data for further multiple regression analysis. The 75 questionnaires were distributed in within 2 months period using convenient sampling method.

4.3. Descriptive Data Analysis

According to the profile of the respondents collected, it can be described that 64.8% of respondents are male SMEs owners and 35.28% are female SMEs owners. The respondents' age range from 5.6% between 15 - 25 years old, 33.3% between 26 - 35 years old, 35.2% between 36 - 45 years old, and 25.9% older than 45 years old. Monthly earnings are mostly under Rp. 20 million per month and only five respondents with income per month exceeding Rp. 20 million per month. The respondent personal data also reveal that 60.7% respondents went to high school as their highest formal education achieved. Most SMEs also have run their business over 4 years long. The target

market is still focused on national market. Problems in running business are mostly in the forms of funding and hiring talented labors.

4.4. Assessment for the Measurement Model

PLS allows the measurement and structural models to be analyzed at the same time (Chin 1998). Analysis using PLS are usually conducted in two stages: 1) the assessment of the measurement model, which focuses more on the reliability and validity of the measures; and 2) the assessment of the structural model which is more concerned with the path coefficients, model adequacy and selecting the best final model (Hulland 1999). These two-step approaches were taken for good psychometric properties before further conclusions can be drawn. This study will follow the statistical analysis according to the two-step approaches.

The measurement model in PLS is evaluated by examining: (1) the individual loading of each item; (2) Internal Composite Reliability (ICR); (3) Average Variance Extracted (AVE); and (4) discriminant validity (Chin 1998). The measurement model focuses on ensuring the validity and reliability of the measures. Firstly, the individual loading of each item can be seen from the following table 2. Each of the loading scores determines the correlation between indicators and their respective constructs. The loading scores can be used to determine the contribution of each indicator to the relevance of its respective construct. The higher the loadings indicate the stronger the relationships in terms of shared variance with the construct. Item loading is also known as item reliability. The higher loading the higher reliability. The loading of 0.5 or 0.6 may still be acceptable in the early stage of scale development (Chin 1998). After running the PLS analysis, there are some indicators that have not met the threshold of the standard minimum loading (< 0.5). These indicators were then dropped and not included in further analysis. Some indicators which were dropped include: One indicator from given resources, two indicators from created resources, four indicators from demand conditions, and four indicators from socio-economic prosperity indicators. In total there were eleven indicators dropped or not reliable as measures in the variables being investigated.

Table 2. Individual loading after filtering

	Original Sample (O)	Sample Mean (M)	Standard Deviation (STDEV)	Standard Error (STERR)	T Statistics (|O/STERR|)
A1 <- GivenRes	0.6639	0.623	0.162	0.162	4.0981
A2 <- GivenRes	0.8346	0.7936	0.1395	0.1395	5.9842
A3 <- GivenRes	0.8245	0.8297	0.1157	0.1157	7.1258
A4 <- GivenRes	0.7864	0.7487	0.1409	0.1409	5.5807
B3 <- CreatedRes	0.8433	0.8348	0.0682	0.0682	12.3615
B4 <- CreatedRes	0.8875	0.8748	0.1102	0.1102	8.0526
B5 <- CreatedRes	0.7947	0.7773	0.0823	0.0823	9.6575
E3 <- Fac Demand	0.7629	0.7586	0.0692	0.0692	11.0243
E4 <- Fac Demand	0.5188	0.5105	0.1416	0.1416	3.6637
E5 <- Fac Demand	0.5536	0.5432	0.1519	0.1519	3.6446
E8 <- Fac Demand	0.7124	0.682	0.1666	0.1666	4.2759
H1 <- Competitiveness	0.8234	0.8208	0.0455	0.0455	18.1005
H2 <- Competitiveness	0.7073	0.7149	0.0944	0.0944	7.4895
H3 <- Competitiveness	0.5514	0.5094	0.1498	0.1498	3.6801
H4 <- Competitiveness	0.563	0.5553	0.1619	0.1619	3.4773
H5 <- Competitiveness	0.5498	0.5256	0.1911	0.1911	2.8775
I1 <- Welfare	0.623	0.6221	0.0945	0.0945	6.5899
I10 <- Welfare	0.7028	0.7112	0.0721	0.0721	9.7536
I6 <- Welfare	0.6349	0.6028	0.1169	0.1169	5.4326
I7 <- Welfare	0.6587	0.6494	0.0907	0.0907	7.2659
I8 <- Welfare	0.7856	0.7734	0.081	0.081	9.6947
I9 <- Welfare	0.7248	0.7147	0.0688	0.0688	10.5269

Table 3 AVE, ICR, and Cronbach's Alpha

	AVE	Composite Reliability	R Square	Cronbachs Alpha	Communality	Redundancy
Competitiveness	0.4203	0.7789	0.3607	0.6611	0.4203	0.0453
CreatedRes	0.7101	0.88	0	0.7969	0.7101	0
Fac Demand	0.4163	0.7354	0	0.5293	0.4163	0
GivenRes	0.6089	0.8607	0	0.7918	0.6089	0
Welfare	0.4769	0.8446	0.265	0.7961	0.4769	0.0933

Secondly, using the data from table 3, Internal Composite Reliability (ICR) can be analyzed. According to Chin (1998) and Fornell and Larcker (1981), ICR should be higher than 0.7. Based on table 3 ICR ranges from the lowest 0.7355 (factor demand) to 0.88 (created resources). This means that ICR values in this study fulfils the requirement as reliable measures. The third step is testing the AVE. As suggested by Chin (1998) and Fornell and Larcker (1981), AVE should be higher than 0.5.

This study has four factors having AVE below 0.5. All of these factors are maintained since the content validity has been assessed by experts in the competitiveness study and the measures have been well developed and tested from previous studies. In addition, AVE is not the only identification for valid measure. The discriminant validity will be further tested using cross loadings and square root AVE.

Table 4. Crossloadings

	Competitiveness	CreatedRes	Fac Demand	GivenRes	Prosperity
A1	0.2155	0.3009	0.027	**0.6639**	0.0931
A2	0.298	0.1627	0.0902	**0.8346**	0.0693
A3	0.3986	0.2988	0.1381	**0.8245**	0.1891
A4	0.2041	0.1996	0.0171	**0.7864**	0.0466
B3	0.2904	**0.8433**	0.1183	0.3304	0.338
B4	0.3667	**0.8875**	0.1934	0.2149	0.4952
B5	0.2704	**0.7947**	0.042	0.2542	0.4532
E3	0.3363	0.2102	**0.7629**	0.0578	0.3208
E4	0.1898	0.2405	**0.5188**	0.0551	0.3925
E5	0.2538	0.0177	**0.5536**	0.1375	0.3272
E8	0.3418	-0.0323	**0.7124**	0.0344	0.2224
H1	**0.8234**	0.3176	0.4515	0.2374	0.4602
H2	**0.7073**	0.4062	0.292	0.3406	0.3776
H3	**0.5514**	0.1942	0.2415	0.1709	0.2696
H4	**0.563**	0.1245	0.1449	0.2421	0.3278
H5	**0.5498**	0.0135	0.2535	0.2543	0.1427
I1	0.5316	0.3211	0.3774	0.2479	**0.623**
I10	0.3587	0.4601	0.2428	0.2034	**0.7028**
I6	0.2665	0.286	0.2312	0.0239	**0.6349**
I7	0.2222	0.2503	0.3435	-0.1028	**0.6587**
I8	0.2586	0.4096	0.4259	-0.0692	**0.7856**
I9	0.2459	0.3349	0.2262	0.0493	**0.7248**

Table 5 Correlation and AVE square roots.

	Competitiveness	CreatedRes	Fac Demand	GivenRes	Prosperity
Competitiveness	**0.6483**	0	0	0	0
CreatedRes	0.3718	**0.8430**	0	0	0
Fac Demand	0.447	0.1486	**0.6452**	0	0
GivenRes	0.3812	0.3101	0.1036	**0.7803**	0
Prosperity	0.5148	0.5123	0.462	0.1426	**0.69058**

In order to test the discriminant validity, crossloading and AVE square roots will be analyzed. The discriminant validity is shown when the indicators are better associated with their respective construct than they are with other constructs. When checking the cross-loadings, researchers must ensure whether each group of indicators should load higher for its respective construct than indicators of other constructs (Cunningham 2008). The crossloading matrix of the measures showing the

correlations between all items and constructs are displayed in table 4. Since all indicators that have not satisfied the item loadings have been dropped, there remained indicators that as shown in table 4 were well associated with their respective construct. The indicators that associated with their respective construct load higher than association to other constructs.

In addition, as indicated in Table 5, the square root of the AVE was tested against the intercorrelations of the construct with the other constructs in the model to ensure discriminant validity (Chin, 2003, Fornell & Larcker, 1981). All the square root of the AVE exceeded the correlations with other variables. Thus, the measurement model was considered satisfactory with the evidence of adequate reliability, convergent validity, and discriminant validity.

4.5. Assessment for the Structural Model

The use of R-squared (R^2) is important in determining the predictive ability of the model. PLS produces R^2 for each of dependent construct in the model. The bigger the R^2, the more predictive power the model implies. As seen in Figure 2, R-squared (R^2) of cluster competitiveness is 37.2% and socio-economic prosperity is 26.5%. The rule-of-thumb for the significance of R^2 of the predicted variables should be greater than 0.10 (Falk & Miller 1992). Even though they both cluster competitiveness and socio-economic do not show a strong R^2, they are higher than the threshold 0.10.

This study proposes an indirect relationship between destination competitiveness factors and socio-economic welfare via clusters competitiveness. In assessing indirect relationships, this study follows the approach suggested by Baron and Kenny's (1986). Baron and Kenny's (1986) method is widely accepted in marketing studies (e.g. Agarwal et al. 2003; Matear et al. 2002). There are three requirements highlighted to test the mediation effect: 1) the independent variable (X) must affect the mediating variable (Y); 2) the independent variable (X) must affect the dependent variable (Z); and 3) the mediating variable (Y) must affect the dependent variable (Z). As can be seen in Figure 1 below, the impacts of related-supporting industries on clusters competitiveness is not significant with the coefficient of 0.049. Similarly, the impact of strategy-structure-rivalry to clusters competitiveness is also not significant with coefficient of 0.093. This means that both factors do not satisfy the requirements as suggested by Baron and Kenny (1986) for indirect model. These two factors were then dropped and are not use for further analyses.

Figure 2 shows the final model after related-supporting factors as well as strategy-structure-rivalry were dropped. Using the result from the final model, it can be concluded that hypothesis three and hypothesis five were not supported. On the other hand, hypotheses 1, 2, and 4 were supported, meaning that positive relationship exists between given resources, created resources, and demand conditions to clusters competitiveness. Hypothesis six is also accepted when dropping related-supporting industries and strategy-structure-rivalry. This means that clusters competition mediates the relationships of three destination competitiveness factors and socio-economic welfare. Table 6 shows the significance of the final structural model of this study.

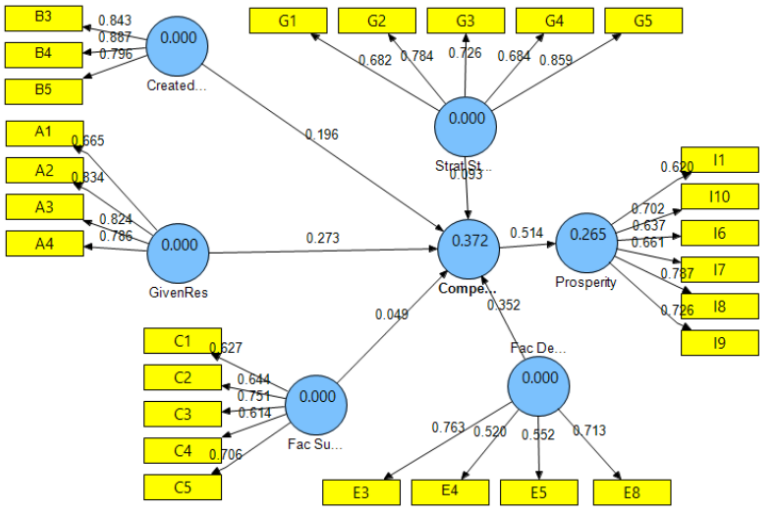

Figure 1. Proposed Research Model

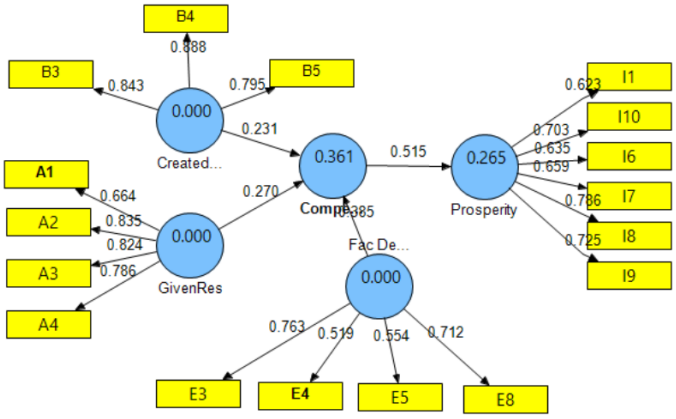

Figure 2. Final Research Model

Table 6. Total effect

	Original Sample (O)	Sample Mean (M)	Standard Deviation (STDEV)	Standard Error (STERR)	T Statistics (|O/STERR|)
Competitiveness -> Prosperity	0.5148	0.5458	0.0552	0.0552	9.3316
CreatedRes -> Competitiveness	0.231	0.2318	0.0841	0.0841	2.7476
CreatedRes -> Prosperity	0.1189	0.1282	0.051	0.051	2.3301
Fac Demand -> Competitiveness	0.3848	0.4049	0.0656	0.0656	5.8695
Fac Demand -> Prosperity	0.1981	0.2205	0.0403	0.0403	4.9207
GivenRes -> Competitiveness	0.2697	0.2797	0.0931	0.0931	2.8965
GivenRes -> Prosperity	0.1388	0.1516	0.0496	0.0496	2.8008

5. DISCUSSIONS

Based on respondents' profile, majority of the handicrafts producers are small and medium business owners. They are in the middle age with dominantly less than 45 years old. The level of education background is majority high school graduates. These data imply that handicrafts owners in Bantul have limitations and thus getting supports from government, education institutions, and industries are of significant important. Due to limitations in funding and education, handicrafts SMEs in Bantul lack crafts skill and managerial competences. Limitation in education could effect on the ability to handle global competition as well as adapting global market. Management skills and leaderships are vital to SMEs owners in that they can motivate their employee better. Most owners stated that the most challenges were related to lack of funding and labor talents. Difficulties to find young generations to work as craftsmen can be caused by the low appreciation for craftsmen product by the locals and this job is perceived as not giving a good career. Another reason is many younger generations prefer to work in the manufacture setting as compared to become entrepreneurs. The problem related to funding should be overcame by a more collaborative approaches facilitated by government, industries, education institutions and SMEs.

Bantul is a small town located in southern part of Yogyakarta. Bantul has huge natural resources. It is well known as exporters of bags and other accessories made from natural fibers. Kotagede is also parts of Bantul which is very famous with silver craft. Pottery from Kasongan is another well known product made by Bantul residents. Wooden batik is a new innovation of batik crafts as alternative to traditional batik materials. According to the factors analyzed as the sources of destination competitiveness, three factors (given resources, created resources and demand conditions) are positively significant in predicting clusters competitiveness. Cluster competitiveness also significantly mediates the relationship between destination competitiveness factors and socio-economic factors. The following discussions will start from direct relationships of factors that have significant impacts.

Given resources and created resources are positively impacted on clusters competitiveness. This finding supports the finding from previous study (eg. Dwyer & Kim (2003); Jackson (2006); Eickelpasch, et al. (2010); Kim (2012)). These resources as in Porter Diamond is known as factor conditions. The handicrafts SMEs in Bantul are commonly a small-medium size and they have not applied advanced managerial practices such as branding, promotion or financial planning. Many are depending on product order. The specific characteristics of the craftsmen are the indigenous skills that they have. These indigenous skills provide uniqueness that is not easily copied. This indigenous skills gives specific areas /clusters a distinct skill in the making of product supported by the availability of raw materials and created resources. Having clusters with distinct product talents gives Bantul attractiveness particularly for artistic product hunters. On the other side, Bantul has ample of natural resources providing steady stock for production process. The availability and ease of access on raw materials help SMEs to work efficiently. Steady stock of raw materials and human talents are seen by SMEs owners as directly contribute to their competitiveness. However, challenges on the future stocks

of human talent must be addressed since younger generations are reluctant to work as handicrafts entrepreneurs and prefer to work in the more formal institutions.

Given resources as sources of comparative advantage will not perfectly work if created resources are not well provided. The provision of infrastructure, transportation, telecommunication, and access support to market network should complement given resources. Porter argued that today's winning competition is no longer coming from comparative but shifting to competitive advantage. Both given and created resources are seen by respondents as directly impact on clusters competitiveness since the capability to produce must be assisted by attractive market place, policy and regulations, as well as public infrastructures. Government interference in this factor is important. The provision of marketplace for handicrafts SMEs is not only done by physically providing the market. But more importantly, the program, the content, and the network fulfilled to the market will be more useful for SMEs participating in the market. Government should actively encourage SMEs participations for trade event, organize festivals and assist network building with potential buyers.

This study supports the proposition that demand factors have impact on clusters competitiveness. Demand conditions represent the attractiveness of home demand and may influence the quality, innovation and competition on the industry. The significant influence of demand conditions to clusters competitiveness implies that SMEs respondents admit that handicrafts market becomes more attractive and competitive when local demand and varieties of demand increase. Varieties of buyers background whether local or international buyers increase the craftsmen talents since they have to be able to translate the products required by many different buyers. As tourism and education centre, Yogyakarta is very open to visitors not only as for tourist but also as for students to learn new skills/knowledge and as for residents to make a living. The openness and the blend among people from all over the world makes the interaction on needs, wants, experiences, skills and education high. The higher sophistication on demand influences the level of competition and ultimately the level of products' competitiveness made in Bantul.

The fact that related-supporting industries are not significantly impact on clusters competitiveness is quite surprising and does not align with previous research findings. However, this finding can be explained by these following arguments. The handicrafts SMEs are mainly focus on production activities as compared to doing commercial or marketing activities. They also see that tourism sectors such as entertainment, cultural performances, culinary, education, hotel, travel agency as not directly relating to profit in their production processes. This might explain why respondents who are SMEs owners do not see that supporting-related industries directly impact on clusters competitiveness. In reality, SMEs handicrafts industry is highly depending on the success of tourism industry. However, any activities that do not relate to success on production process is not considered competitive effort as seen by SMEs.

Research on handicrafts SMEs in Bantul has found that strategy-structure-rivalry does not have impact on clusters competitiveness. This means that this finding is not in align with previous

findings on destination/tourism sectors when using Porter Diamond as predictors of competitiveness. This factor represents how the industries are established, organized and managed. The different findings can be explained similar to finding as with supporting-related industries factors. Simply, respondents are not considering anything that is not directly within internal production processes as determining their competitiveness. Due to lack of managerial skills and network interactions, SMEs owners are too focus on internal capability and lack response to external environment. The family business orientation could be the reason why change is not common. SMEs also majority satisfied with managing business as far as by depending on order (made to order). They do not proactively expand and introduce their business proactively. This type of traditional nature of running business will not survive in facing the global competitors. Government, education institutions, and bigger industries should take into action in protecting the sustainability of handicrafts SMEs.

Clusters competitiveness was found to influence socio-economic welfare. Clusters competitiveness also mediates the relationships between created resources, given resources, and demand conditions to socio-economic welfare. This finding is in align with previous studies by Dwyer & Kim (2003), Jackson (2006), Eickelpasch, et al. (2010), and Kim (2012). This finding implies that success in clusters will increase the level of competitiveness. When the cluster is competitive, more jobs will be created, more supplies will be needed, and the residents will have better buying power. In this situation, the economy will be more attractive. Simply, the quality of life of the residents within competitive cluster will increase. As previously stated, regions with a strong presence of clusters are more likely to success in achieving economic growth or GDP benefits as compared to region without active clusters. Thus, it is important that cluster approach needs to be adopted in the handicrafts SMEs since the final goal of all development is residents welfare and the quality of life. Additionally, the role of clusters competitiveness also vital since it mediates the relationships between three factors of destination competitiveness to socio-economic welfare. This again confirms that cluster approaches for handicrafts SMEs need to be adopted so that better collaboration among clusters or among SMEs are even better and stronger.

6. CONCLUSSION AND RECOMMENDATIONS

The goal of national development is the increase in the quality of residents' life. In order to achieve the quality of life, a nation must be competitive. The purpose of this research is to analyze the application of destination competitiveness in the handicrafts SMEs to see whether the factors of competitiveness do influence the clusters competitiveness and socioeconomic welfare. After several steps of statistical analyses, the final model reveals that only three hypotheses supported meaning that only given resources, created resources, and demand conditions that directly and indirectly effect socio-economic welfare. Clusters competitiveness also significantly supported as mediating variable. Hypothesis three and hypothesis five are not supported. Thus, these factors (related/supporting industries and strategy-structure-rivalry) were not used as analysis in the final model.

This study offers some contributions to the literature and the managerial practices. The factors determining destination competitiveness studied in the handicrafts SMEs in Bantul Yogyakarta provides more evidences on the application of Ported Diamond as a base for developing destination competitiveness strategy. Clusters competitiveness is also important in determining the socio-economic welfare of the region/area being investigated. For the managers, a broader aspect of competitive moves should be considered. Not only that SMEs owners focus merely on internal capabilities, but also external factors that do not seems to directly effect on competitiveness should be seriously taken into consideration. The understanding of the external competitive factors will help SMEs owners/managers and policy makers to decide a more sustainable strategy for longer competitiveness.

REFERENCES

Agarwal, S, Erramilli, M.K. and Dev, C.S, (2003), "Market orientation and performance in service firms: role of innovation", Journal of Services Marketing, Vol. 17 No. 1, pp. 68-82.

Baron, R.M. and Kenny, D.A, (1986), "The moderator mediator variable distinction in social psychological-research-conceptual, strategic and statistical considerations", Journal of Personality and Social Psychology, Vol. 51 No. 6, pp. 1173-82.

Chin, W.W, (1998), "The partial least squares approach to structural equation modeling", In: G. A. Marcoulides (Ed.), Modern Methods for Business Research (pp. 295–358), Mahwah, NJ: Lawrence Erlbaum Associates.

Chin, W.W, Marcolin, B.L and Newstead, P.R, (2003), "A partial least squares latent variables modeling approach for measuring interaction effects: results from a Monte Carlo simulation study and electronic-mail emotion/adoption study", Information System Research, Vol. 14 No. 2, pp. 189-217.

Crouch, G.I, and Ritchie, J.R.B, (1999), "Tourism, competitiveness, and societal prosperity", Journal of Business Research, Vol 44 No 3, pp. 137-152.

Cunningham, E, (2008), "Structural equation modelling using AMOS", Statsline, Melbourne.

Dwyer, L. and Kim, C, (2003) "Destination competitiveness: Determinants and indicators", Current Issues in Tourism, Vol 6 No 5, pp. 369-414.

Falk, R.F and Miller, N.B (1992), "*A primer for soft modeling"*, University of Akron Press, Akron, OH.

Fornell, C and Larcker, D (1981), "Structural equation models with unobservable variables and measurement error: algebra and statistics", Journal of Marketing Research, Vol. 18 No. 3, pp. 382-88.

Gomezelj, D.O. and Mihalič, T, (2008), "Destination competitiveness-Applying different models, the case of Slovenia", Tourism Management, Vol. 2 No. 2, pp. 294-307.

Gooroochurn, N. and Sugiyarto, G, (2005), "Competitiveness indicators in the travel and tourism industry", Tourism Economics, Vol. 11 No.1, pp. 25-43.

Gursoy, D., Baloglu, S. and Chi, C.G, (2009), "Destination competitiveness of Middle Eastern countries: An examination of relative positioning", Anatolia, Vol 20 No. 1, pp. 151-163.

Hughes, K.S, (1993), "European Competitiveness", Cambridge University Press.

Hulland, J, (1999), "Use of partial least squares (PLS) in strategic management research: A review of four recent studies", Strategic Management Journal, Vol. 20 No. 2, pp. 195-204.

Ketels, C, (2015), "Competitiveness and Clusters: Implications for a New European Growth Strategy", Work Package 301 MS48, Policy paper: Role of clusters, competitiveness in the new orientation of the European growth strategy", Working Paper no 84.

Kim, N, (2012), "Tourism destination competitiveness, globalization, and strategic development from a development economics perspective", PhD Dissertation in Recreation, Sport and Tourism University of Illinois at Urbana-Champaign, USA.

Lakip, (2014), "Laporan Akuntabilitas Kinerja Instansi Pemerintah (Lakip) Kabupaten Bantul Tahun 2013", Pemerintah Kabupaten Bantul Pemerintah Daerah Istimewa Yogyakarta, available at http://setda.bantulkab.go.id/documents/20140522103011-lakip-2013.pdf. assessed 5 July 2015

Lee, C.F. and King, B, (2009), "A determination of destination competitiveness for Taiwan's hot springs tourism sector using the Delphi technique", Journal of Vacation Marketing, Vol. 15 No. 3, pp. 243-257.

Mena, M.M, (2006), "Exploring destination competitiveness from a Social development perspectives, evidence from South East Asia", PhD Dissertation, The Hongkong Polytechnic University, School of Hotel and Tourism Management.

Matear, S.M., Osborne, P., Garrett, T.C. and Gray, B.J, (2002), "How does market orientation contribute to service firm performance? An examination of alternative mechanisms", European Journal of Marketing, Vol. 36 No. 9/10, pp. 1058-1075.

Nurani, N, (2014), "The Effectiveness of Act No. 19 Year 2002 Concerning With Copyright As A Protection of Craft Creative Industry to Increase the Acceleration of Creative Economic Growth of Indonesia" Journal Of Contemporary Management Sciences, Vol 1 No. 2, pp. 32-45.

OECD, (1992), "Technology and the economy the key relationships", Paris: OECD Publ.

Pangestu, M.E, (2008), "Pengembangan Ekonomi Kreatif Menuju Visi Ekonomi Kreatif Indonesia 2025 - Rencana Pengembangan Ekonomi 14 Sub Sektor Ekonomi Kreatif Indonesia 2009-2015", Departemen Perdagangan RI, hlm 1. Available at http://www.karokab.go.id/koperindag/images/stories/BluePrintEkonomiKreatifIndonesiaBuku2.pdf, accessed 15 June 2015.

Porter, M.E, (1998), "Competitive Advantage of Nations", Free Press.

Porter, M.E, (1990), "The Competitive Advantage of Nations", Harvard Business Review, Vol. 68 No. 2, pp. 73-93.

Ritchie, J.R.B. and Crouch, G.I, (2003), “The Competitive Destination: A sustainable tourism perspective (First.)”, CABI Publishing, Wallingford, UK.

Sujatmiko, T, (2013), “Disperindagkop Bantul Gelar Pelatihan Ekspor-Impor”, , available at http://krjogja.com/read/193769/disperindagkop-bantul-gelar-pelatihan-ekspor-impor.kr, assessed in 15 November 2013

The Jakarta Post, (2014), “Creative Industry Grow 6 percent”, available at http://www.thejakartapost.com/news/2014/02/14/creative-industry-grow-6-percent.html (accessed 11 Mei 2014).

Viva (2010), “HIMPI Targetkan Ekspor Kerajinan U$$ 650 juta. Produk Indonesia Yang Inovatif Banyak Dicari Dan Diekspor Ke Luar Negeri”, available at http://forum.viva.co.id/indeks/threads/himpi-targetkan-ekspor-kerajinan-us-650-juta.32666/ accessed 18 June 2015.

EXAMINING THE RELATIONSHIP BETWEEN SAVINGS AND DEPOSIT RATES

Tafirei Mashamba [a,*], **Rabson Magweva** [a]

[a] Department of Banking and Finance, Great Zimbabwe University, PO Box 1235, Masvingo, Zimbabwe

ABSTRACT

Using the VECM approach, the study analysed the link between savings rates in Zimbabwe and deposit rates and other macroeconomic variables for the period 1983 to 2006. The study established a long run relationship exists between the savings and deposit rates. The speed of adjustments toward long run equilibrium was found to be 83% per annum which is a swift adjustment. It was also established that shocks to savings rates in Zimbabwe explained much of the variances even up to ten years. This implies that savings rates are less exogenous, though inflation rates and deposit rates are the independent variables which explain variability in savings rates. It is against these findings that the Zimbabwean monetary authorities vary the savings rates directly to influence the volume of capital saved as all other independent variables influence savings rates after more than 5 years.

ARTICLE INFO

Keywords:
Savings, Deposit Rates, Zimbabwe, VECM, IRF, Variance Decomposition

**Corresponding author:*
cfamashamba@gmail.com

1. INTRODUCTION

In any economy, banks primarily exist to provide intermediation services between surplus and deficit units (Olayemi & Michael, 2013). This is achieved through channelling funds from surplus to deficit units. Citing (Uremadu, 2006) Olayemi & Michael posits that for a nation to achieve meaningful economic growth there must be investable funds. These investable funds come from deposits made by economic agents with financial institutions. Acha & Acha (2011) concur with these sentiments by noting that countries that are hungry for economic growth must look into their interest rate structures since economic growth is tied to the level of investable funds in the economy.

McKinnon (1973) and Shaw (1973) are of the opinion that liberalising interest rates trigger interest rates to rise and as interest rates wax economic agents are willing to save more and these savings are pooled together by banks to create investable funds. Contrary to McKinnon & Shaw beliefs many studies which were carried out in Sub Saharan Africa (which adopted IMF's prescribed Economic Structural Adjustment Programmes (ESAP)) did not find a positive impact of interest rate liberalisation on deposit mobilisation. For example, (Ngugi & Kabubo (1998) Serieux (2008) and Onwumere et al (2012)) found a negative relationship between liberalised interest rates and savings. Contrary, (Moyo (2001), Chigumira & Masiyandima (2003)) observed that financial sector reforms were successful in improving the

level of savings. Actually, Moyo's study on Zimbabwe revealed that the high interest rate regime did trigger a spiral growth in deposits by financial institutions.

Following the Global Financial Crisis (GFC) of 2007 access to foreign reserves is becoming increasingly difficult. As such domestic resources are becoming increasingly vital for the supply of the much needed finance for economic development (Aryeetey, 2009). According to Reserve Bank of Zimbabwe (RBZ) statistics an estimated US$2 billion is circulating outside the formal banking system (RBZ Press Statement, January 2014). Low deposit rates coupled with very high bank charges have been cited as the major impedes to banks' efforts to attract long term deposits (Mverecha (2011), RBZ Press Statement, (January 2014)).

In Zimbabwe the savings ratio has been very low. Such a trend has dire implications for economic growth, employment creation and poverty alleviation (UN, 2010). Although savings rose sharply in the early 1990s when financial sector reforms were introduced, these gains were reversed in the late 1990s as inflation took its ugly face (Chigumira & Masiyandima, 2003). From 1998 the savings ratio has been on a free fall with a surprise peak between 2004 & 2005. Makina (2009) attributes this abrupt change to underestimated nominal Gross Domestic product (GDP) due to price controls. On the other hand as the savings ratio plummeted from 2004, the deposit rate has been increasing at an increasing rate only to slow down in 2009 when the local currency was abandoned in favour of hard currencies. The persistent rise in deposit rates that was experienced can be attributed to hyperinflation that ensured during the period.

In response to wake up calls from the RBZ a number of commercial banks have come up with various savings investment schemes aimed at harnessing deposits from the public and the corporate world. Notable savings scheme currently in operation include; CBZ CashPlus Savings Account, FBC Pfimbi/Isiphala Savings Account and POSB EasySave Savings Account (Mashamba et al, 2014).

Mwega (1990) suggests that positive interest rates have two effects on savings; substitution and wealth effect. The former leads to higher level of savings as economic agents defer current consumption for future consumption while the latter leads to increased consumption because economic agents withdraw the interest earned.

It is imperative to note that studies on the savings-interest rate nexus have not been conclusive to date (Mwega, 1990). To further clarify the issue further research need to be done. In this

study modern econometric techniques (namely Vector Error Correction Modelling) is applied to explore the issue of the savings-interest rate nexus in the Zimbabwean context.

The rest of the paper is organised as follows; Chapters two reviews related literature, chapter three provides the blue print followed to carry out the study; chapter presents the results and the conclusion and recommendations are made in chapter five.

2. LITERATURE REVIEW

2.1 THEORETIC FRAMEWORK

Two main theories attempt to describe the savings behaviour of households in an economy. These are the Life Cycle Hypothesis forwarded by Modigliani in 1954 and the Permanent Income Theorem postulated by Friedman in 1957.

The Life Cycle Theorem (Modigliani 1954)

This model attempts to explain individuals' consumption during his/her life span. The theory states that individuals plan their consumption and savings behaviour over a long period of time and intend to smoothen out their consumption behaviour over time. Individuals are expected to save less in their youthful stages and increase their savings with age. In their retirement time they are expected to feed on their savings accumulated to their retirement day.

Permanent Income Theorem PIH (Friedman 1957)

In this model individuals base their consumption patterns on their permanent (long term average income) rather than current income. As such households' consumption is determined by their real wealth rather than the current disposable income. People are expected to save when they anticipate their permanent income to be less than their current income or when their current income is higher than the forecasted permanent income level to cushion themselves against future decrease in their income. The implication of this model is that the elasticity of savings with respect to current income varies proportionately with the degree of changes in permanent income. DeJuan & Seater (2006) expects the elasticity to be higher when the fraction of variation in permanent household income is significant.

2.2 EMPIRICAL LITERATURE

Carroll & Weil (1994) investigated the relationship between income growth and savings on a sample of 86 countries using cross country and household data. At the aggregate level they found a uni-directional causal relationship running from income growth to savings. At the household level they established that households with higher income growth tend to save more than those with predominantly low income levels. Their findings refute the PIH of consumption to explain household savings. In their paper Reinhart & Ostry (1995) argue that savings have nothing to do with interest rates in poor economies. They found that in low income countries savings are inelastic to changes in interest rates hence raising the interest rates is highly unlikely to yield meaningful increase in household savings. According to the authors this is caused by subsistence considerations. Most of the households live at subsistence level so for them to save they must breakthrough the subsistence level which is very difficult to achieve.

Three key elements of real deposit rates on the level of savings in an economy were identified by Matsheka (1998). Firstly, the author notes that positive deposit interest rates are necessary to stimulate the domestic savings rate; secondly, the high deposit rates promote economic growth by increasing the level and efficiency of investments leading to a positive relationship between financial sector growth and economic growth.

Ozcan et al (2003) carried out a study in Turkey to identify the key variables that influence private savings. Their model incorporated six groups of variables likely to explain savings covering government policies, income & growth variables, financial variables, demographic variables and uncertainty variables. Using an Ordinary Least Squares model they found that the variables that determine private savings in Turkey have a strong inertia and are highly serially correlated. Also they established a negative relationship between government savings to Gross domestic Product ratio and the savings rate, a positive relationship between the income level on private savings rate and an insignificant relationship between current account deficit and private savings.

Matsheka (2010) found a strong negative relationship between domestic savings and interest rates in Botswana. From the findings the author deduces that the income effect of an interest rate rise is greater than the substitution effect hence interest income earned was not saved.

Anaripour (2011) analysed the relationship between interest rates and economic growth for a panel data of 22 countries with homogenous features for the period 2004 to 2010. Applying the Granger Causality test the author found a one-sided causal relationship between economic growth and interest rates (running form economic growth to interest rate) and a negative relationship between interest rates and economic growth. The study concluded that there is no relationship between interest rates and economic growth.

Acha & Acha (2011) studied the relationship between savings and interest rates in Nigeria for the period 1970 to 2005. The author used the Pearson's Correlation Coefficient to test the hypothesis that savings do not depend on interest rates. The results show a negative relationship between these two variables, therefore for the Nigerian economy interest rates play an insignificant role in determining savings.

3. METHODOLOGY

The study investigates short run and long run dynamic relationship between savings and deposit interest rate in Zimbabwe and other macroeconomic variables (Gross Domestic Product and inflation) for the period 1983 to 2006. All data is obtained from World Bank database on Zimbabwean statistics. We adopted the following methodology;

- Firstly, the variables were tested for the presence of unit roots and the order of integration using the Augmented Dicker-Fuller (ADF) test.
- Secondly, an unrestricted undifferenced Vector Autoregressive Model was set up to determine the appropriate lag length using the Akaike's Information Criterion (AIC) and Schwarz's Information Criterion (SIC).
- Thirdly, after identifying the variables order of integration; if they are found to be cointegrated the Johansen & Juselius (1990) co integration test is applied to determine the number of co integration vectors. However, if no co integration is established a Vector Autoregressive model is set up. In this study the variables were found to be cointegrated of order I(1).
- Fourthly, the Vector Error Correction Model is estimated to test for short run and long run dynamics in the system.
- Lastly, Impulse Response and Variance Decomposition analysis on the Vector Error Correction Model is done to study the response of the variables to shocks in the error term and other variables and analyse the proportion of the movements in the dependent variable.

3.1 UNIT ROOT TESTS

Since most of the macroeconomic time series data is non stationary with a deterministic trend regressing such data yields questionable, invalid and spurious results. To avoid such a problem the data must first be tested for stationarity (Gujarati, 2004). In this regard the ADF unit root test was used to test the presence of unit root tests and to determine the order of integration of the variables.

Under the ADF unit root test, the null hypothesis ($H_0: \beta_1 = 0(unit\ root)$) is tested using the following expression in Gujarati (2004:817)

$$\Delta Y_t = \beta_1 + \beta_2 t + \delta Y_{t-1} + \sum_{i=1}^{m} \alpha_i \Delta Y_{t-1} + \varepsilon_t \quad (1)$$

Where; ε_t is the pure white noise error term

$\Delta Y_{t-1} = (Y_{t-1} - Y_{t-2})$

$\Delta Y_{t-2} = Y_{t-2} - Y_{t-3}$ e.t.c

Decision Rule: Reject H_0 if the t-ratio is greater than the critical values in the model and the data is assumed to be stationary.

3.2 COINTEGRATION TEST

Following Johansen & Juselius (1990) a multivariate test for co integration was done to examine the long run or equilibrium relationship between savings and IRS in Zimbabwe. This requires the calculation of trace and maximum Eigenvalue statistics to examine the presence of co integrating vectors.

The trace statistic (λ_{trace}) for testing the null hypothesis (H_0: There are at most r co integrating vectors) against the alternative hypothesis (H_1: There is a trace statistic) is given as;

$$\lambda_{trace}(r) = -T \sum_{i=r+1}^{n} \ln(1 - \lambda_i) \quad (2)$$

The maximum Eigenvalue statistic (λ_{max}) for testing the null hypothesis (H_0: There are exactly r co integrating vectors) against the alternative hypothesis (H_1: There is are $r + 1$ co integrating vectors) is given as;

$$\lambda_{max}(r, r+1) = -Tln(1 - \lambda_{r+1})$$

Where: λ_i is the estimated characteristic roots or the Eigen values.

T is the number of usable observations.

3.3 THE VECM

A Vector Error Correction model (VECM) is developed to examine the dynamic relationship among the variables in the system. In a Vector Error Correction Model we examine how each exogenous variable deviates in the short run from its long run equilibrium given by the co integrating vectors (Eruygur, 2009). In this research a Vector Error Correction Model is developed to investigate both the short run and long run relationship dynamic interactions among the co integrated variables in the system.

3.4. IMPULSE RESPONSE ANALYSIS

In order to find out how each variable in the system responds over time to a shock in itself and in another variable impulse response analysis is carried out. In light of this, an impulse response analysis was carried out to trace out the response of the exogenous variables in the system to shocks in the error terms and other variables.

4. RESULTS

4.1. UNIT ROOT TEST RESULTS

Table 4.1: Unit Root Tests Results

Variable	ADF statistic	Critical Values	Order of Integration	Decision	Significance Level
LogSR	-3.41189	-3.0810	I(1)	Stationary	5%
LogDR	-3.8588	-3.1450	I(1)	Stationary	5%
LogGDP	-4.5408	-4.5326	I(1)	Stationary	1%
LogINR	-4.6925	-4.3943	I(1)	Stationary	1%

Checking for unit roots revealed that the variables had unit root at level but after first differencing all variables became stationary. If our variables are integrated of the same order (I(1) in this case) then we can apply the Johansen-Juselius Maximum Likelihood co integration to determine the number of co integrating vectors as presented in 4.2.1.

4.2 COINTEGRATION RESULTS

To determine the number of cointegration relationships we implemented the Johansen and Juselius (1990) cointegration tests.

4.2.1 Unrestricted Cointegration Rank Test (Trace)

Table 4.2.1. Unrestricted Cointegration Rank Test (Trace)				
Hypothesized		Trace	0.05	
No. of CE(s)	Eigenvalue	Statistic	Critical Value	Prob.**
None *	0.665388	62.36598	47.85613	0.0012
At most 1 *	0.618532	34.99641	29.79707	0.0115
At most 2	0.309828	10.90320	15.49471	0.2175
At most 3	0.063226	1.632835	3.841466	0.2013

Trace test indicates 2 cointegrating eqn(s) at the 0.05 level

* denotes rejection of the hypothesis at the 0.05 level

**MacKinnon-Haug-Michelis (1999) p-values

4.2.2 Unrestricted Cointegration Rank Test (Maximum Eigenvalue)

Table 4.2.2. Unrestricted Cointegration Rank Test (Maximum Eigenvalue)				
Hypothesized		Max-Eigen	0.05	
No. of CE(s)	Eigenvalue	Statistic	Critical Value	Prob.**
None	0.665388	27.36957	27.58434	0.0532
At most 1 *	0.618532	24.09320	21.13162	0.0186
At most 2	0.309828	9.270370	14.26460	0.2643
At most 3	0.063226	1.632835	3.841466	0.2013

Max-eigenvalue test indicates no cointegration at the 0.05 level

* denotes rejection of the hypothesis at the 0.05 level

In Table 4.2.1 and 4.2.2 it is shown that both the Maximum Eigenvalue as well as Trace Statistics Tests indicates the existence of two cointegrating equations. Therefore we reject the null hypothesis that there is no co integration among the variables at 5% significance level and conclude that a long run relationship exist among the variables. The Trace Test and Maximum Eigenvalue Test indicate that there are two co integrating equations. The presence

of cointegrating terms provides a room for estimating VECM in which case two error correcting terms will be established. Each equation will contribute an additional error term involving a different linear combination.

4.3 VECTOR ERROR CORRECTION MODEL (VECM)

Granger (1969) proposes that if the variables in a system are co integrated, then a valid error correction model should exist. In this context, savings and deposit rates are co integrated hence the following VECM can be estimated to show the short run dynamics in the system.

As can be noted in Table 4.3 (Appendix), the first part of the VECM shows the cointegrating equations and their coefficients where the coefficient of deposit rates is zero. This is contrary to what Abdullahi Dahir Ahmed (2007) noted from Botswana where deposit rate positively affects private savings. The coefficient for GDP being 56.64, indicating that a percentage change in GDP is likely to cause 56.64 units change in savings rates. For inflation rate the coefficient is 19.06 indicating that a percentage change in inflation is likely to result in 19 units change in savings rate considering the first cointegrating equation.

As far as the VECM estimates are concerned, we can only see that the coefficient of the first error term C(1) is negative, but we cannot determine whether its significant or not. The same can be said on the second error term and on short run coefficients. Thus we go on to generate a systems equation (so that the p-values are indicated) and concentrate on the model of interest where savings rate is the dependent variable. From the estimated VECM, the error correction terms are the C(1) and C(2) as there are two cointergrating terms (see Table 4.2 above). Considering the first error correction term, it has a coefficient of -0.827884 and is significant - looking at the p-value. This indicates that about 83% of disequilibrium is corrected each year or savings rates return to equilibrium after a change in the independent variables, at rate of 83% per year. As the error correction term is negative, significant and between zero and one, it confirms the long-run equilibrium relationship among the variables
The second error correction term is meaningless as it is a positive figure and more than 100% indicating an explosion, that's the additional error term involving a different linear combination, is meaningless and thus also insignificant.
Then the other coefficients are short run coefficients of which only first lag of savings rate (savings rate in the previous period), C(3), with a coefficient of -0.43865, first lag GDP C(7)

with a coefficient of -15.13063, first lag interest rate, C(9) with a coefficient of 8.530147and the constant term are significant.

4.4 IMPULSE RESPONSE FUNCTION

Impulse Response Function (IRF) traces out the response of current and future values of each of the variables to a one unit shock in the current errors of the VAR errors, assuming that this error returns to zero in subsequent periods and all other errors are equal to zero. In this case we analyse the responsiveness of the dependent variable savings rates, to shocks to each of the endogenous variables.

Table 4.5 (Appendix) reveal that savings rates in Zimbabwe respond highly to own shocks in the first period or first year- which concurs with variance decomposition table below. In subsequent periods, savings rates respond positively to shocks in deposit rates and negatively to inflation rates as expected. Response to other variable shocks becomes more significant after the 5th year whereby the shocks to deposit rates stimulate highly changes in savings rates.

4.5 VARIANCE DECOMPOSITION

Variance decomposition reveals the proportion of the movements in the dependent variable, savings rates that are due to own shocks against shocks from other variables. That is, it separates variation in an endogenous variable into component shocks to the VAR. From Table 4.6 (Appendix), savings rates in Zimbabwe are less exogenous as even in the 10th year about 33% of its variance was explained by own shocks. That is, after 10 years, the forecast error in savings rates that can be attributed to innovations in other variables amount to approximately 67%. This concurs with what Abdih and Tanner (2009) noted in their US study when they noted that households eliminate their savings disequilibria exclusively by adjusting their primary savings, rather than the other variables.

Comparatively, deposit rates explain the maximum variance in savings rates after the 5th year. This is in line with what Matsheka (1998) discovered in Botswana where he concluded that positive deposit interest rates are necessary to stimulate the domestic savings rate

Inflation rate also explains the variance in savings rate and GDP is relatively less important in creating functions in savings rates as we go further from the current periods.

5. DISCUSSION OF RESULTS

The results from data analysis clearly show the existence of a long run relationship between the variables though deposit rates does not in the long run influence savings rates in Zimbabwe. Swift correction- in case of changes in the independent variables, or deviation from long run equilibrium, savings rate is estimated to correct the disequilibrium swiftly to the tune of 83% per annum.

Own shock explains much of the variability in savings rates- this might be an indication of inertia which implies that factors that affect saving rates will have larger long-term impacts than short-term ones Ozcan *et al* (2003) as evidenced by large variance decomposition contribution from other variables contributing significantly after 5 years. Thus, in the short run, shock to other exogenous variables in the model less effective in affecting savings rates in Zimbabwe.

6. CONCLUSION

Using the VECM approach, the study analysed the link between savings rates in Zimbabwe and GDP, deposit rates and inflation rates for the period. The study established the existence of a long run relationship between the variables. The speed of adjustments toward long run equilibrium was found to be 83% per annum which is a swift adjustment. It was also established that shocks to savings rates in Zimbabwe explained much of the variances even up to ten years. This implies that savings rates are less exogenous, though inflation rates and deposit rates are the independent variables which explain variability in savings rates. It is against these findings that the Zimbabwean monetary authorities **vary the savings rates directly** to influence the volume of capital saved as all other independent variables influence savings rates after more than 5 years.

7. REFERENCES

Acha I.A and Acha C.K (2011), "Interest rates in Nigeria: An Analytical Perspective," *Research Journal of Finance and Accounting*, 2 (3).

Anaripour, J.T (2011), "Study on relationship between interest rate and economic growth by EVIEWS (2004-2010, Iran)," *Journal of Basic and Applied Scientific Research,* 1(11) 2346-2352.

Aryeetey, E (2009), "The global financial crisis and domestic resource mobilisation in Africa," *AfDB Working Paper Series No. 101*/July 2009

Carrol & Weil (1994), "*Savings and Growth: A Reinterpretation*," Carnegie-Rochester Conference Series on Public Policy, 40 133-192

Chigumira, G & Masiyandima, N (2003), "*Did financial sector reforms increased savings and lending for the SMEs and the Poor*? IFLIP Research Paper, 3(7)

DeJuan, P.J and Seater, J.J (2006), "A simple test of Friedman's Permanent Income Hypothesis," *Econometrica* 73, 27-46

Friedman, M (1957), "A theory of the Consumption Function," *Princeton University Press*, New Jersey, USA

Granger, C.W.J., (1969), "Investigating causal relations by econometric models: Cross Spectral methods", *Econometrica*, Vol 37, 424–438

Gujarati, D.N. (2004) *Basic Econometrics*, 4th edition, McGraw-Hill publishers, New York, USA

Johansen, S and Juselius, K., (1990), "Maximum Likelihood Estimation and Inference on Cointegration with Applications to the demand for Money," *Oxford Bulletin of Economics and Statistics*, 52(2), 169-210

Makina D, (2009), "Recovering of the financial sector to building financial inclusiveness", *Working Paper 5, UNDP Zimbabwe*

Mashamba et al (2014), "Analysing the relationship between Banks' Deposit Interest Rate and Deposit Mobilisation: Empirical evidence from Zimbabwean Commercial Banks (1980-2006)," *IOSR-Journal of Business and Management*, 16(1) 64-75.

Matsheka, T.C (1998), "Interest rate and the saving-Investment process in Botswana," *African Review of Money, Finance and Banking* 1(2) 5-23

McKinnon, R.I, (1973) "Money and Capital in Economic Development", *Brookings Institution, Washington D.C*

McKinnon, R.I, (1973) "Money and Capital in Economic Development", *Brookings Institution*, Washington D.C

Moyo, T (2001), "Financial sector liberalisation and the Poor - A Critical Appraisal," SAPRI Workshop, Harare International Conference Centre 2001, Online document, Viewed 18 December 2015.

doi: http://www.slideserve.com/leo-fox/liquidity-challenges-and-way-forward

Mverecha, D (2011), "Liquidity Challenges and Way Forward", *BAZ Publication*. Online document, Viewed 18 December 2015

doi: http://www.saprin.org/zimbabwe/research/zim_fin_sect.pdf

Mwega, F.M et al (1990), "Real interest rates and mobilisation of private savings in Africa: A Case Study of Kenya," *AERC Research Paper No.2*/November 1990

Ngugi R.W & Kabubo, J.W (1998), "Financial sector reforms and interest rate liberalisation: the Kenya experience," *African Economic Research Consortium*, Research Paper No. 72

Olayemi, S.O & Michael, J.O (2013), "Real interest rate and savings mobilisation in Nigeria," *International Journal of Development and Economic Sustainability*, 1(2) 28-40

Onwumere, J.U.J et al (2012), "The Impact of Interest rate liberalisation on Savings and Investment: Evidence from Nigeria," *Research Journal of Finance & Accounting*, 3 (10) 130-136.

Ozcan, K.M et al (2003), "Determinants of private savings behavior in Turkey," Applied *Economics*, 35 1405-1416

Reinhart, C and Ostry, J (1995), "Savings and real interest rates in developing countries," *MPRA Paper No.13352*

Reserve Bank of Zimbabwe, "*Press Statement*", January 2014

Serieux, J (2008), "Financial Liberalisation and domestic resource mobilisation in Sub Saharan Africa: An Assessment," *Working Paper Brasilia International Poverty Centre*

Shaw, E. S. (1973), "Financial Deepening in Economic Development", *Oxford University Press*, New York, USA

APPENDICES

Table 4.2.1 Unrestricted Cointegration Rank Test (Trace)				
Hypothesized		Trace	0.05	
No. of CE(s)	Eigenvalue	Statistic	Critical Value	Prob.**
None *	0.665388	62.36598	47.85613	0.0012
At most 1 *	0.618532	34.99641	29.79707	0.0115
At most 2	0.309828	10.90320	15.49471	0.2175
At most 3	0.063226	1.632835	3.841466	0.2013

Trace test indicates 2 cointegrating eqn(s) at the 0.05 level

* denotes rejection of the hypothesis at the 0.05 level

**MacKinnon-Haug-Michelis (1999) p-values

Table 4.2.2 Unrestricted Cointegration Rank Test (Maximum Eigenvalue)				
Hypothesized		Max-Eigen	0.05	
No. of CE(s)	Eigenvalue	Statistic	Critical Value	Prob.**
None	0.665388	27.36957	27.58434	0.0532
At most 1 *	0.618532	24.09320	21.13162	0.0186
At most 2	0.309828	9.270370	14.26460	0.2643
At most 3	0.063226	1.632835	3.841466	0.2013

Max-eigenvalue test indicates no cointegration at the 0.05 level

* denotes rejection of the hypothesis at the 0.05 level

**MacKinnon-Haug-Michelis (1999) p-values

Table 4.3: Vector Error Correction Estimates

Date: 04/04/15 Time: 13:55

Sample (adjusted): 1983 2006

Included observations: 24 after adjustments

Standard errors in ( ) & t-statistics in [ ]

Cointegrating Eq:	CointEq1	CointEq2
SR(-1)	1.000000	0.000000
LOGDR(-1)	0.000000	1.000000
LOGGDP(-1)	56.64000	4.724117
	(9.31583)	(1.14042)
	[6.07998]	[4.14245]
LOGINR(-1)	19.05713	0.178121
	(2.56738)	(0.31429)
	[7.42278]	[0.56674]
C	-446.8481	-34.19502

Error Correction:	D(SR)	D(LOGDR)	D(LOGGDP)	D(LOGINR)
CointEq1	-0.827884	0.023195	-0.008657	0.024600
	(0.20019)	(0.03319)	(0.00619)	(0.03682)
	[-4.13545]	[0.69880]	[-1.39782]	[0.66808]
CointEq2	6.463243	-0.159478	-0.117042	-0.079484
	(1.93230)	(0.32038)	(0.05978)	(0.35541)
	[3.34484]	[-0.49778]	[-1.95800]	[-0.22364]
D(SR(-1))	-0.438650	-0.022424	0.007175	-0.045267
	(0.18978)	(0.03147)	(0.00587)	(0.03491)
	[-2.31135]	[-0.71264]	[1.22207]	[-1.29679]
D(SR(-2))	-0.172141	-0.026578	-0.000102	-0.031312
	(0.19909)	(0.03301)	(0.00616)	(0.03662)
	[-0.86463]	[-0.80515]	[-0.01653]	[-0.85506]
D(LOGDR(-1))	-2.664978	0.138853	0.086449	0.231533
	(1.91199)	(0.31701)	(0.05915)	(0.35168)
	[-1.39383]	[0.43801]	[1.46158]	[0.65837]
D(LOGDR(-2))	0.065933	-0.137195	0.113848	-0.113283
	(1.90672)	(0.31614)	(0.05898)	(0.35071)
	[0.03458]	[-0.43397]	[1.93012]	[-0.32301]
D(LOGGDP(-1))	-15.13063	-0.164724	0.492810	-0.166711
	(6.95975)	(1.15394)	(0.21530)	(1.28013)
	[-2.17402]	[-0.14275]	[2.28893]	[-0.13023]

D(LOGGDP(-2))	-12.99122	-0.533431	0.162421	0.501398
	(9.21952)	(1.52861)	(0.28521)	(1.69577)
	[-1.40910]	[-0.34896]	[0.56948]	[0.29568]
D(LOGINR(-1))	8.530147	-0.059925	0.083447	-0.708448
	(2.94302)	(0.48796)	(0.09104)	(0.54132)
	[2.89843]	[-0.12281]	[0.91657]	[-1.30875]
D(LOGINR(-2))	4.713686	-0.274460	0.037540	-0.604851
	(2.25771)	(0.37433)	(0.06984)	(0.41527)
	[2.08782]	[-0.73320]	[0.53749]	[-1.45654]
C	-4.000115	0.108580	-0.051949	0.323344
	(0.96226)	(0.15955)	(0.02977)	(0.17699)
	[-4.15698]	[0.68056]	[-1.74514]	[1.82688]

Table 4.4: Dependent Variable: D(SR)

Method: Least Squares

Date: 04/17/15 Time: 19:15

Sample (adjusted): 1983 2006

Included observations: 24 after adjustments

D(SR) = C(1)*(SR(-1) + 56.6400010657*LOGGDP(-1) + 19.0571325678 *LOGINR(-1) - 446.848064591) + C(2)*(LOGDR(-1) + 4.72411722886 *LOGGDP(-1) + 0.178121043115*LOGINR(-1) - 34.1950165475) + C(3)*D(SR(-1)) + C(4)*D(SR(-2)) + C(5)*D(LOGDR(-1)) + C(6) *D(LOGDR(-2)) + C(7)*D(LOGGDP(-1)) + C(8)*D(LOGGDP(-2)) + C(9) *D(LOGINR(-1)) + C(10)*D(LOGINR(-2)) + C(11)

	Coefficient	Std. Error	t-Statistic	Prob.
C(1)	-0.827884	0.200192	-4.135454	0.0012
C(2)	6.463243	1.932301	3.344843	0.0053
C(3)	-0.438650	0.189781	-2.311346	0.0379
C(4)	-0.172141	0.199091	-0.864634	0.4029
C(5)	-2.664978	1.911986	-1.393828	0.1867
C(6)	0.065933	1.906718	0.034579	0.9729
C(7)	-15.13063	6.959750	-2.174019	0.0488
C(8)	-12.99122	9.219523	-1.409098	0.1823
C(9)	8.530147	2.943022	2.898431	0.0124
C(10)	4.713686	2.257710	2.087818	0.0571
C(11)	-4.000115	0.962265	-4.156980	0.0011
R-squared	0.771137	Mean dependent var		-0.962365

Adjusted R-squared	0.595088	S.D. dependent var	4.821265
S.E. of regression	3.067900	Akaike info criterion	5.383426
Sum squared resid	122.3561	Schwarz criterion	5.923367
Log likelihood	-53.60111	Hannan-Quinn criter.	5.526672
F-statistic	4.380250	Durbin-Watson stat	1.899745
Prob(F-statistic)	0.007574		

Table 4.5:
Response of SR:

Period	SR	LOGDR	LOGGDP	LOGINR
1	3.067900	0.000000	0.000000	0.000000
2	1.589383	1.918395	-2.038673	-2.556474
3	2.719303	2.592985	-0.394316	-0.911476
4	2.705846	2.171221	0.449098	-2.416551
5	2.817831	3.861749	0.523534	-2.491921
6	3.226515	4.307573	0.790331	-2.403414
7	3.016960	4.058932	0.346926	-3.053058
8	3.189725	3.776081	0.437400	-2.600146
9	3.059921	3.626351	0.311513	-2.640850
10	3.005728	3.881814	0.302905	-2.645377

Table 4.6: Variance Decomposition of SR:

Period	S.E.	SR	LOGDR	LOGGDP	LOGINR
1	3.067900	100.0000	0.000000	0.000000	0.000000
2	5.129341	45.37472	13.98792	15.79691	24.84046
3	6.435417	46.68104	25.12113	10.41100	17.78684
4	7.713093	44.80343	25.41192	7.586527	22.19812
5	9.424905	38.94516	33.80785	5.389522	21.85747
6	11.14430	36.23719	39.12084	4.357706	20.28426
7	12.61800	33.98382	40.86403	3.474841	21.67731
8	13.80577	33.72593	41.61614	3.003030	21.65490
9	14.83859	33.44680	41.99693	2.643605	21.91266
10	15.85486	32.89045	42.78003	2.352066	21.97746

JCGIRM Journal of Corporate Governance, Insurance, and Risk Management (JCGIRM)
2015, Volume 2, Series 3

Pages 52-66

The Demand for International Reserves in Lesotho

Senei Solomon Molapo[a], **Retselisitsoe Isaiah Thamae**[b,*]

[a]Ministry of Finance, Government of Lesotho, Maseru 100, Lesotho
[b]Department of Economics, National University of Lesotho, P.O. Roma 180, Lesotho

ABSTRACT

The study examines Lesotho's demand for holding international reserves and assesses the country's reserve adequacy position over the period 1981-2012. The results from the standard reserve adequacy benchmarks reveal that Lesotho generally has sufficient stock of foreign reserves to satisfy the minimum adequacy requirements, with the level of reserves in other periods being relatively higher than what is required. Furthermore, the estimates of Lesotho's reserve demand function from the cointegration analysis suggest that the long-term reserve demand policies for Lesotho are positively related to average propensity to import, economic growth and export volatility while negatively associated with exchange rate volatility and opportunity cost of holding reserves. The former finding confirms that the precautionary motive plays a significant role in determining Lesotho's demand for holding international reserves, while the latter indicates that reserve accumulation in Lesotho is based on profitability considerations. The results also show that although the demand for foreign reserves increased in the years of democracy, the country sometimes uses part its international reserves to finance government infrastructure projects.

ARTICLE INFO

Keywords:
International Reserves, Reserve Adequacy, Cointegration, Lesotho

**Corresponding author:*
rthamae@gmail.com
(Retselisitsoe Isaiah Thamae)

Article history:

Article Submitted 14-04-2015
Article Accepted 20-06-2015

**Article previously published in EJEM 2015, vol 2, No. 3

1. INTRODUCTION

Over the past three decades, Lesotho has generally experienced an upward trend in international reserves in an attempt to boost international confidence on domestic economy and smooth out random fluctuations in external payment imbalances. Since 1981, nominal (real) foreign reserves have increased from M0.3 (M2.9) billion to M8.5 (M5.1) billion in 2012, reaching a peak of M9 (M6.4) billion in 2008 (2001) (see figure 1). However, there are observable declines in international reserves in some periods that could be attributed to the effects of internal or external shocks on reserves. On the other hand, when compared with other countries within the Southern African Customs Union (SACU)[1] for the period 2010-2014, Lesotho has the second highest stock of foreign reserves as a percentage of GDP with an average of 46%, following Botswana with the average of 55%. On the other hand, Swaziland, Namibia and South Africa have the averages of 19%, 14% and 12%, respectively (see table 1). As a result, questions arise regarding adequacy and demand drivers for international reserves in

[1] SACU member states include Botswana, Lesotho, Namibia, South Africa and Swaziland.

Lesotho. First, what is Lesotho's position in terms of reserve adequacy? Second, what are the country's motives for foreign reserve accumulation?

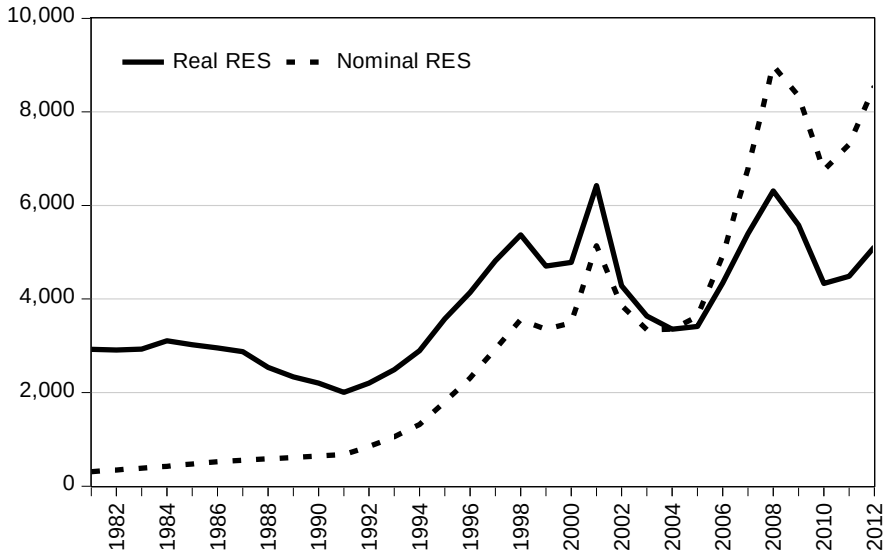

Figure 1: Trends in real and nominal international reserves (RES) in Lesotho (Million Maloti)

Table 1: International reserves (as % of GDP) in SACU countries (2010-2014)

Country	2010	2011	2012	2013	2014	Average
Botswana	54	58	54	54	54	55
Lesotho	**44**	**42**	**45**	**51**	**51**	**46**
Swaziland	18	16	19	22	19	19
Namibia	14	16	14	13	12	14
South Africa	10	12	12	14	13	12

Source: Own calculations using data from the international financial statistics of the International Monetary Fund (IMF).

It is against the above background that the study examines Lesotho's demand for holding international reserves and assesses the country's reserve adequacy position. Although studies like that of Sula (2011), Pina (2011) and Elhiraika and Ndikumana (2007) provide the empirical investigation of the demand for foreign reserves in developing countries, including Lesotho, they suffer from methodological problems related to cross-country analyses such as the influence of outliers and the heterodoxity of sample countries under study. Therefore, this paper contributes to empirical literature on international reserve holdings by using time series data covering the period 1981-2012 from Lesotho, which is a small but highly open economy operating under a fixed exchange rate regime. Furthermore, the findings of this study could help policy-makers in Lesotho to better understand some of the fundamental developments affecting the country's motives for foreign reserve accumulation and may serve as a reference for the design of Lesotho's international reserve policy. The rest of the paper

is then organised as follows. Section 2 reviews the literature on the demand for foreign reserves while section 3 provides Lesotho's brief economic context and analyses the country's reserve adequacy position. Section 4 estimates the reserve demand function for Lesotho and offers the discussion of the results. The last section concludes the study with implications for further research.

2. LITERATURE REVIEW

International (or foreign) reserves are regarded an indispensable financial resources of an economy and they exist in every independent economy that is open to international transactions. However, the amounts of foreign reserves held by the authorities in various economies are different depending on the array of policy-determined and objective factors. The existing literature thus outlines several objectives for holding international reserves. These motives are commonly allocated in two components, namely the precautionary and mercantile motives (see Aizenman and Lee, 2007; Chan, 2007). The former is based on the fact that economies with a high degree of openness are likely to come across random shocks to their external balance, which builds temporary discrepancies between international payments and receipts or creates balance of payments (BOP) imbalance. Under such condition, the foreign reserves can be used as a shock absorber, representing the economy's ability to finance the payments deficit without resorting to painful and undesirable adjustments.

Kenen and Yudin (1965) further argue that for countries which borrow heavily abroad to finance BOP deficits, the foreign reserves informally carry out the function of collateral for external liabilities. Nonetheless, this function is considered to be notional since the external assets of an economy, which include the international reserves, are the ultimate resources for settling foreign liabilities in order to achieve sustainable external balance. Alternatively, international reserves are regarded to play a central role in enhancing confidence in national currencies of small economies that are in a process of liberalising their external accounts. This is because the loss of confidence as a result of foreign reserves falling below a certain band could induce currency-holders to export capital, thus causing disruption in external balance and monetary stability. Therefore, the precautionary motive directly links foreign reserve accumulation in different economies to exposure to unanticipated sudden-stop crises, capital flight and volatility.

On the other hand, the mercantile motive views the accumulation of international reserves as a foundation for promoting export competitiveness. Under this motive, the country's reserve accumulation is considered to facilitate export growth by slowing or preventing the appreciation of domestic currency against other foreign currencies. In this context, reserve accumulation is therefore regarded as a residual of an industrial policy aimed at imposing adverse effects on the export capabilities of other trading partners. Nevertheless, the holding of large foreign reserves – irrespective

of the motive – involves a high degree of risk (see Chan, 2007). First, the appreciation of domestic currency increases the risk of loss of value of the international reserves and this may require adjustment mechanisms, which often come with a cost in aggregate income or welfare foregone. Second, the holding of foreign reserves has an opportunity cost since part of these financial resources could be used in a number of alternatives ways such as servicing short-term debt or financing investment projects. According to Mishra and Sharma (2011), this opportunity cost could be high especially in developing countries where the demand for funds to finance developmental projects always exceeds the available supply.

Given that there are both benefits and costs in accumulating international reserves, a number of studies have been undertaken to determine either the adequacy of reserves or their demand in different countries. For example, Mishra and Sharma (2011), Drummond and Dhasmana (2008) as well as Bird and Rajan (2003) assess the adequacy of reserves in emerging economies using simple rules of thumb such as maintaining reserves equivalent to three months of imports, short-term external or total amount of broad money. The former reserve adequacy measure serves as a guarantee of no hindrance in external trade transaction even in a case of complete cut-off from foreign inflows while the latter provides a useful measure of the potential for capital flight from the country. Alternatively, the ratio of reserves to short-term external debt could be a relevant measure of risks associated with adverse developments in international capital markets. The use of these traditional reserve adequacy ratios could therefore help the central banks to follow a rational and cautious approach by not allowing the reserves to cross beyond the required thresholds while at the same time using them for alternative purposes to avoid the opportunity costs of holding large amounts of foreign reserves.

On the other hand, the empirical evidence on the demand for reserves from studies like that of Sula (2011), Mishra and Sharma (2011), Elhiraika and Ndikumana (2007), Badinger (2004) as well as Aizenman and Marion (2003) has identified the following variables, among others, for inclusion in estimating the reserve demand function: the size of the international transactions (represented by the average propensity to import), the standard of living (proxied by the overall economic growth), the volatility of international receipts and payments (captured by export volatility), and that of nominal exchange rate (as measures of uncertainty), the opportunity cost of holding reserves (proxied by the difference between domestic interest rate and yield on foreign reserves) and the size of short-term external debt. Since most of these variables are found to significantly explain the demand for foreign reserves not only in developed countries but also in emerging economies, they are therefore suitable to capture the motives for international reserve holdings in the context of Lesotho.

3. ECONOMIC BACKGROUND AND RESERVE ADEQUACY IN LESOTHO

3.1. Economic Context

Lesotho is a lower-middle income country with a per capita income of about US $1000. It has experienced an annual GDP growth rate of approximately 4% over the past three decades (Thamae, 2013). The country's economic progress depends mainly on the developments in the neighbouring Republic of South Africa (RSA), which surrounds it entirely, through the remittances of workers employed in the RSA mines as well as the sale of water resources to RSA. Lesotho's economy is also anchored by strong performance in the mining and quarrying sector and the existence of a preferential agreement with the United States (US) under the African Growth and Opportunity Act (AGOA) that boosts the output in the textile sector (IMF, 2012). Furthermore, Lesotho is a beneficiary of SACU's free trade agreement and the SACU receipts account for about half of total government revenues (Masenyetse and Motelle, 2012). These transfers from SACU constitute the main channel through which the country accumulates international reserves, especially in a form of Rands from RSA.

Since 1974, Lesotho has also been a member of the Rand Monetary Area (RMA) – now known as the Common Monetary Area (CMA) from 1986, whereby the currencies of each member state were 100% backed by the RSA Rands and were pegged at par with it. In addition, the country has entered into a bilateral agreement with RSA, which gives a provision for the RSA Rands to be a legal tender in Lesotho. According to CBL (2012), about 90% of foreign reserves in the cash balance portfolio are therefore in RSA Rands, while the remaining 10% is in US Dollars, Euros, British Pounds and other foreign currencies. This could be expected since RSA is Lesotho's major trading partner, with Lesotho importing approximately 80% of its goods and services from RSA (IMF, 2012). On the other hand, the US Treasury bills dominate Lesotho's investment portfolio of international reserves, which still includes the RSA Treasury bills. The last portfolio of Lesotho's foreign reserves is made up of the IMF accounts such as IMF quotas, SDR holdings and fund reserve tranche, and the interest accrued on RSA Rands.

3.2. Reserves in Months of Imports

The study adopts two among various traditional rules of thumb for reserve adequacy to analyse Lesotho's position[2]. The first one examined under this sub-section is the import cover, which is a ratio of foreign reserves to total imports. It represents number of months for which the country's reserves could support its current level of imports, if all other inflows and outflows stop. According to Fischer

[2] Only two measures of reserve adequacy are considered due to lack of data on some variables such as short-term external debt.

(2001), different countries are recommended to hold international reserves that could cover at least 3 to 4 months of their imports. Thus, this ratio postulates that the demand for reserves is expected to grow with the level of international trade.

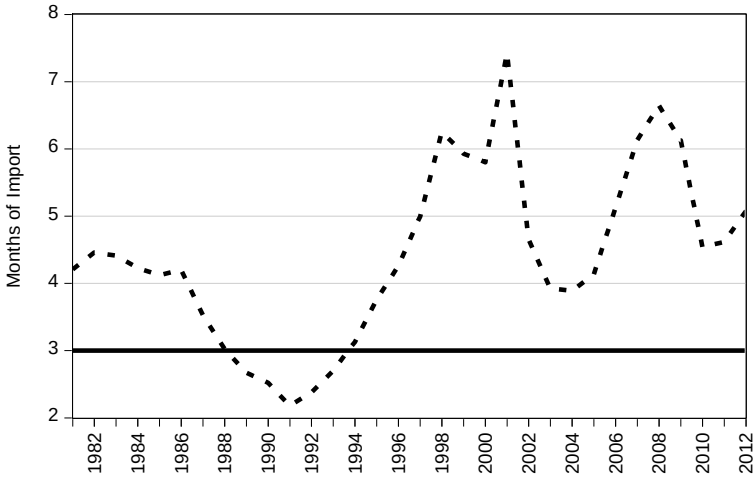

Figure 2: International reserves in months of imports

Using the yearly data on international reserves and total imports over the period 1981-2012[3], figure 3 reveals that Lesotho's stock of foreign reserves has continuously stayed above the minimum required level of 3 months of imports except during the period 1986-1994 when it fell below the required benchmark. Prior to 1993, the level of reserves reached the maximum of 4.5 months of imports in 1982 and then fell in the subsequent years to a minimum of 2.2 months of imports in 1991. However, since the beginning of the democratic regime in 1993, Lesotho accumulated sufficient amount of foreign reserves, peaking 6.2, 7.4 and 6.6 months of imports in 1998, 2001 and 2008, respectively. Thus, these observed cycles in the import cover could imply that Lesotho holds international reserves as a buffer stock against external shocks, whereby it accumulates reserves in times of abundance and depletes them in times of scarcity.

3.3. Reserves as Ratio of Broad Money

The other reserve adequacy benchmark considered under this sub-section is the ratio of reserves to broad money (M2 in the case of Lesotho), which reflects the country's exposure to capital flight risk. Flood and Marion (2001) argue that the risk that domestic liquidity could be converted into foreign assets is greater for countries with the currency peg than those with the flexible exchange rate regime. The conventional range of reserves to broad money ratio is said to be 5-15% and its low and falling figure is a leading indicator of currency crisis (see Kaminsky & Reinhart, 1999).

[3] The dataset on reserves and imports is obtained from the Central Bank of Lesotho and the Ministry of Finance, respectively.

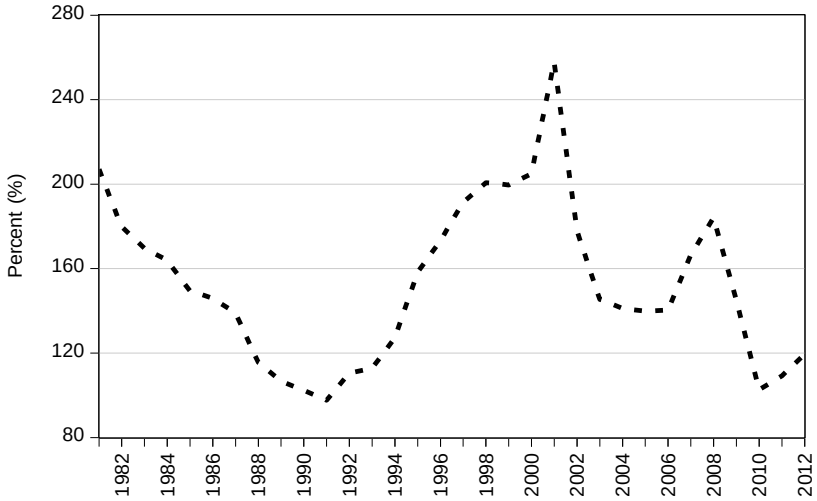

Figure 3: Ratio of international reserves to broad money (M2)

Figure 3 shows that foreign reserves in Lesotho have been far above the conventional range of 5-15% of the broad money[4] over the entire period, with a minimum of about 100% in 1991 and 2010. This is expected since Lesotho's currency needs to be 100% backed by the RSA Rands (which constitute about 90% of Lesotho's international reserves in the cash balance portfolio) in order to maintain the peg under the CMA agreement. Nevertheless, the fact that foreign reserves at times could reach a peak of about 260% of broad money and 7.4 months of imports (see figure 2), just like in 2001, indicates that there is a need to determine other motives for holding international reserves in Lesotho.

4. ESTIMATING LESOTHO'S RESERVE DEMAND FUNCTION

4.1. Model Specification and Estimation Strategy

The study follows the works of Mishra and Sharma (2011) as well as Aizenman and Marion (2003) to assess various motives of demand for foreign reserves in Lesotho. The standard long-run model for international reserves (RES) is then specified as a function of average propensity to import (API), economic growth (GDP), export volatility (EXV), exchange rate volatility (ERV) and opportunity cost (OPC) as follows[5]:

$$\mathrm{RES}_t = \beta_0 + \beta_1 \mathrm{API}_t + \beta_2 \mathrm{GDP}_t + \beta_3 \mathrm{EXV}_t + \beta_4 \mathrm{ERV}_t + \beta_5 \mathrm{OPC}_t + \beta_6 \mathrm{Z}_t + \mu_t \qquad (1)$$

where μ is the error term, the β's are parameters to be estimated, t denotes the time period and Z captures the impact of exogenous conditions on foreign reserves. Given that reserves holding should

[4] The dataset on M2 is obtained from the Central Bank of Lesotho for the period 1981 to 2012.
[5] The variable on short-term external debt is not included in the model due to unavailability of data.

increase with the size of international transactions and the standard of living, the signs of the coefficients β_1 on API and β_2 on GDP are expected to be positive. If that is the case, the former variable would be a proxy for the economy's openness and vulnerability to external shocks. In addition, if the international receipts and payments are expected to help cushion the economy, their increasing volatility would imply holding more reserves and as a result, β_3 on EXV is expected to be positive. On the other hand, β_4 on ERV is expected to be negative since greater volatility in exchange rate should reduce the demand for reserves under a fixed exchange rate regime, whereby the central bank does not need large amounts of reserves to manage the exchange rate. β_5 on OPC is also expected to be negative since increases in the opportunity cost of holding reserves would lead to a fall in their demand. Lastly, the expected sign of the coefficient β_6 on exogenous conditions (Z) is ambiguous.

The paper employs the Johansen's (1988, 1995) multivariate cointegration procedure to estimate Lesotho's reserve demand function provided by equation (1). This technique is adopted because it performs better in terms of determining the long-run relationship among variables of the same order of integration. The Phillips-Perron (PP) test is then used to ascertain the presence of unit root among the series (Phillips and Perron, 1988). If the series are integrated of the same order, that is, $\mathrm{I}(1)$, the maximum likelihood estimation of the following unrestricted vector autoregression (VAR) model is undertaken to determine the existence of cointegrating relationships:

$$\mathrm{Y}_t = \delta + \sum_{k=1}^{p} \Pi_k \mathrm{Y}_{t-k} + \psi \mathrm{Z} + \mu_t \tag{2}$$

Given that Y is non-stationary and must be differenced in order to become stationary, equation (2) can be written in an error-correction form as follows:

$$\Delta \mathrm{Y}_t = \delta + \sum_{k=1}^{p-1} \Gamma_k \Delta \mathrm{Y}_{t-k} + \Pi \mathrm{Y}_{t-1} + \psi \mathrm{Z} + \mu_t \tag{3}$$

where Y_t is a 6 by 1 vector containing endogenous variables RES, API, GDP, EXV, ERV and OPC, all at time period t. δ, Γ_k and ψ are parameters to be estimated, p is the lag length, Π is a matrix of the long-run parameters, Z is a matrix of exogenous variables and μ is a vector of white noise errors. The optimal lag length p is selected on the basis of the information criterion while the trace and maximum eigenvalue statistics are used to establish the cointegrating rank. Under cointegration, the matrix Π has a rank of r and it can be decomposed as $\Pi = \alpha\beta'$, where α is a 6 by 1 matrix of the adjustment coefficients and β is a 6 by 1 matrix of the coefficients in the cointegrating equation. Lastly, the Engle

and Granger (1987) causality test within the vector error-correction model (VECM) is applied to examine the causal relationship between the endogenous variables included in the model.

4.2. Data and Unit Root Test Results

The study uses annual time-series data for the period 1981-2012, with all real variables in 2004 constant prices. The dataset on total imports and exports as well as economic growth (proxied by real per capita GDP) is sourced from the Ministry of Finance (MOF) while that on international reserves, Loti/US Dollar exchange rate and domestic interest rate (proxied by the 91-day Treasury bill rate) is obtained from the Central Bank of Lesotho (CBL). The yield on foreign reserves is proxied by the RSA discount rate and the data is obtained from the South African Reserve Bank (SARB). On the other hand, the volatility of exports and exchange rate is calculated as the conditional variance of the regression of the trend series of exports and exchange rate. The PP unit root test is then used to determine the order of integration of the variables included in the model, with the optimal lag length selected by the Schwarz information criterion (SIC). The null hypothesis states that the series is non-stationary and failure to reject it indicates that there is a unit root. Table 2 reports the unit root test results in both levels and first differences. On the basis of the p-values, all variables are found to be integrated of order one at the 5% level of significance. This implies that a long-run and stable relationship might exist between the level of international reserves and its determinants in Lesotho.

Table 2: Phillips-Perron (PP) unit root tests

Variable	H_0: **non-stationary in levels**		H_0: **non-stationary in first differences**	
	Test statistic	**p-value**	**Test statistic**	**p-value**
RES	-1.964	0.597	-3.909	0.024
API	-0.753	0.382	-10.04	0.000
GDP	-1.981	0.589	-7.354	0.000
EXV	-2.386	0.154	-9.522	0.000
ERV	-1.989	0.290	-5.441	0.000
OPC	-1.454	0.543	-9.205	0.000

Note: All variables except OPC are in logarithmic form.

4.3. Cointegration Test Results

Given that the variables included in the reserve demand function are found to be integrated of the same order, the Johansen multivariate cointegration method is then applied to determine the presence of long-run cointegrating relationship among them. Table 3 presents the cointegration test results, with the optimal lag length of 1 chosen by the SIC. The trace test results in part A of the table confirm the existence of cointegration among the variables. Part B of the table provides the results for the

estimated parameters of the normalised cointegrating equation as well as their adjustment coefficients from the restricted VECM. The Lagrange multiplier (LM), the White heteroskedasticity and the Jarque-Bera diagnostic tests, given at the bottom of the table, indicate that the residuals are approximately white noise, even at the 10% significance level.

Table 3: Cointegration test results

Part A: Johansen trace test for cointegration			
Maximum rank	**Eigenvalue**	**Trace statistic**	**0.05 critical value**
0	0.823	135.16**	83.94
1	0.644	83.16**	60.06
2	0.569	52.20**	40.17
3	0.484	26.94**	24.28
4	0.208	7.08	12.32

Part B: Normailsed cointegrating coefficients						
Variables	**RES**	**API**	**GDP**	**EXV**	**ERV**	**OPC**
α	-0.442** (-4.241)	0.069 (1.284)	- -	- -	0.962* (2.119)	-1.869 (-0.704)
β	1.000 -	-2.191** (-3.347)	-1.178** (-24.12)	-0.728** (-6.665)	0.167* (2.435)	0.043* (1.880)
$\chi^2 = 0.867$ [0.648] LM-statistic = 327.02 [0.422] Jarque-Bera statistic = 13.24 [0.352] White test statistic = 408.78 [0.643]						

Notes: t-statistics in parentheses and p-values in square brackets; ** and * denote significant at 5% and 10% critical level, respectively.

Since the adjustment coefficients for economic growth and export volatility were highly insignificant, the model was re-estimated with the restriction of weak exogeneity on these variables. The p-value of the chi-square test statistic from table 3 justifies that both variables are weakly exogenous (even at the 10% critical level) and hence, their behaviour is only be explained by the short-run dynamics. On the other hand, the adjustment coefficient on international reserves has the expected (negative) sign and it is statistically significant at the 5% level. Thus, about 44% of the deviation from the equilibrium was corrected within one year. This relatively moderate magnitude of the speed of adjustment could indicate a rather active reserve management of the CBL. The cointegration results also show that all the long-run coefficients are significant and have the expected signs as suggested by the theory. For example, the international reserves are found to be positively

related to average propensity to import, economic growth and export volatility while negatively associated with exchange rate volatility and opportunity cost of holding reserves.

The positive relationship between foreign reserves and average propensity to import suggests that the precautionary motive plays a significant role in determining Lesotho's demand for holding international reserves. This means that Lesotho holds reserves as buffer stock against external shocks and that is why it accumulated reserves in times of abundance and depleted them in times of scarcity (see figures 1 and 2). This is also plausible given the persistent current account deficit faced by the country over the sample period. Furthermore, the positive coefficient on economic growth indicates that Lesotho's demand for foreign reserves is also driven by the standard of living while that on export volatility points to the country's dependence on international receipts and payments to help cushion the economy. These findings are similar to that of Mishra and Sharma (2011) on India and Elhiraika and Ndikumana (2007) on African countries, who concluded that the reserve demand policies of those countries depend mainly on the level of international transactions and economic growth.

On the other hand, the uncertainty brought by the exchange rate volatility has a negative effect on international reserves and this shows that the CBL does not need to hold large amounts of reserves to manage the exchange rate since it operates under fixed exchange rate regime. Aizenman and Marion (2003) also found a similar result that greater exchange-rate variability significantly reduces foreign reserve holdings in developing countries. Lastly, the negative association between foreign reserves and opportunity cost suggests that the long-run demand for reserves in Lesotho is also based on profitability considerations. As a result, the CBL seems to resort to other alternative ways of using international reserves (such as financing developmental projects) when their opportunity cost increases. This finding therefore contradicts that of Elhiraika and Ndikumana (2007), who reported that reserve accumulation in African countries (including Lesotho) is not motivated by returns.

4.4. Error-correction and Granger Causality Estimation Results

Along with other long-run determinants of Lesotho's reserve demand, the study also focuses on the role played by exogenous conditions such as the years of democracy (since 1993), the political instability of 1998, the duration of the Phase I of the Lesotho Highlands Water Project (LHWP) (1986-2002), the 2008 US financial crisis, the 1997 Asian financial crisis and the 1991 Indian economic crisis. The estimated short-run dynamics of the VECM (provided in table 3) are given in table A1 in the appendix. It is evident from those results that the years of democracy in Lesotho had a positive and significant effect on reserves while initiation of the LHWP had a negative and significant impact. The latter finding confirms that Lesotho sometimes uses part its international reserves to finance

government infrastructure projects. Other exogenous shocks, however, are found to be less important in influencing Lesotho's demand for foreign reserves.

Table 4: Granger causality test results

Variables	ΔRES	ΔAPI	ΔGDP	ΔEXV	ΔERV	ΔOPC
ΔRES	-	0.047	1.373	0.534	0.339	1.256
ΔAPI	0.112	-	2.677	0.302	1.954	0.076
ΔGDP	1.728	1.095	-	0.001	2.835*	0.068
ΔEXV	0.112	7.946***	0.093	-	0.873	2.845*
ΔERV	3.582*	1.149	0.264	0.477	-	0.918
ΔOPC	0.749	1.756	0.214	4.423**	0.434	-

Notes: Wald statistics are reported; first row (column) presents the dependent (independent) variables; ***, ** and * denote significant at 1%, 5% and 10% critical level, respectively.

On the other hand, table 4 reports the Granger causality test results within the estimated VECM. It is found that there exists unidirectional causality running from exchange-rate volatility to international reserves, export volatility to average propensity to import, and economic growth to exchange-rate volatility, whereas a bi-directional causality exists between opportunity costs and export volatility. The former finding on exchange-rate volatility, together with its observed positive and significant immediate effect on reserves (see table A1 in the appendix), indicates that when the uncertainty in exchange-rate increases, the immediate response of the CBL is to increase foreign reserves. However, given that the CBL does not need to hold large stockpiles of reserves to manage the peg, this behaviour disappears in the long-run as shown by a negative and significant coefficient on exchange-rate volatility from the cointegration results (reported in table 3).

5. CONCLUSION

The paper examines Lesotho's demand for holding international reserves and assesses the country's reserve adequacy position over the period 1981-2012. The results from standard reserve adequacy benchmarks reveal that Lesotho generally has sufficient stock of foreign reserves to satisfy the minimum adequacy requirements, with the level of reserves in other periods being relatively higher than what is required. Furthermore, the estimates of Lesotho's reserve demand function from the cointegration analysis suggest that the long-term reserve demand policies for Lesotho are positively related to average propensity to import, economic growth and export volatility while negatively associated with exchange rate volatility and opportunity cost of holding reserves. The former finding confirms that the precautionary motive plays a significant role in determining Lesotho's demand for holding international reserves, while the latter indicates that reserve accumulation in Lesotho is based

on profitability considerations. The results also show that although the demand for foreign reserves increased in the years of democracy, the country sometimes uses part its international reserves to finance government infrastructure projects. However, the study modelled Lesotho's demand for international reserves in isolation from the money market, which can be incorporated in future research since money disequilibrium could affect reserves in the short-run (see Badinger, 2004).

References

Aizenman, J. and Lee, J. (2007), "International reserves: precautionary versus mercantilist views, theory and evidence", Open Economies Review, Vol. 18 No. 2, pp. 191-214.

Aizenman, J. and Marion, N. (2003), "The high demand for international reserves in the Far East: What is going on?" Journal of the Japanese and International Economics, Vol. 17 No. 3, pp. 370-400.

Badinger, H. (2004), "Austria's demand for international reserves and monetary disequilibrium: The case of a small open economy with a fixed exchange rate regime", Economica, Vol. 71 No. 281, pp. 39-55.

Bird, G. and Rajan, R. (2003), "Too much of a good thing? The adequacy of international reserves in the aftermath of crises", The World Economy, Vol. 26 No. 6, pp. 873-891.

CBL (2012), Annual Report 2011, Central bank of Lesotho, Maseru, March.

Chan, S. S. (2007), "The basic framework for international reserves and its application to Macao", Monetary Research Bulletin No. 2, Monetary Authority of Macao, Macao, January.

Drummond, P. and Dhasmana, A. (2008), "Foreign reserve adequacy in Sub-Saharan Africa", Working Paper, International Monetary Fund, Washington, June.

Elhiraika, A. and Ndikumana, L. (2007), "Reserves accumulation in African countries: sources, motivations, and effects", Economics Department Working Paper Series, University of Massachusetts, Amherst, December.

Engle, R.F. and Granger, C. W. J. (1987), "Cointegration and error correction: representation, estimation, and testing", Econometrica, Vol. 55 No. 2, pp. 251-276.

Fischer, S. (2001), "Opening remarks", IMF/World Bank International Reserves: Policy Issues Forum, Washington, 28 April.

Flood, R. and Marion, P. N. (2001), "Holding international reserves in an era of high capital mobility," Collins, S. M. and Rodrik, D., Brookings Trade Forum, Brookings Institution Press, Washington, pp. 1-68.

IMF (2012), "Kingdom of Lesotho: poverty reduction strategy paper – national strategic development plan", Country Report No. 12/102, International Monetary Fund, Washington.

Johansen, S. (1988), "Statistical analysis of cointegration vectors", Journal of Economic Dynamics and Control, Vol. 12 No. 2-3, pp. 231-254.

Johansen, S. (1995), "Likelihood-based inference in cointegrated vector autoregressive models", Oxford University Press, Oxford.

Kaminsky, G. and Reinhart, C. (1999), "The twin crises: the causes of banking and balance-of-payments problems", American Economic Review, Vol. 89 No. 3, pp. 473-500.

Kenen, P. B. and Yudin, E. B. (1965), "The demand for international reserves", The Review of Economics and Statistics, Vol. 47 No. 3, pp. 242-250.

Masenyetse, R. F. and Motelle, S. I. (2012), "Government revenue-expenditure nexus in Lesotho: the decline in SACU revenue", American Journal of Economics, Vol. 2 No. 1, pp. 8-14.

Mishra, R. K. and Sharma, C. (2011), "India's demand for international reserve and monetary disequilibrium: reserve adequacy under floating regime", Journal of Policy Modeling, Vol. 33 No. 6, 901-919.

Phillips, P. C. B. and Perron, P. (1988), "Testing for a unit root in time series regression", Biometrika, Vol. 75 No. 2, pp. 335-346.

Pina, G. (2011), "The recent growth of international reserves in developing economies: A monetary perspective", Job Market Paper, Universitat Pompeu Fabra, Barcelona, November.

Sula, O. (2011), "Demand for international reserves in developing nations: A quantile regression approach", Journal of International Money and Finance, Vol. 30 No. 5, 764-777.

Thamae, R. I. (2013), "The growth of government spending in Lesotho" Economic Analysis and Policy, Vol. 43 No. 3, pp. 339-352.

Appendix

Table A1: Estimation results of the error-correction model (ECM)

Error-correction	**ΔRES**	**ΔAPI**	**ΔGDP**	**ΔEXV**	**ΔERV**	**ΔOPC**
α	-0.442**	0.069	-	-	0.962	-1.869
	(-4.241)	(1.284)	-	-	(2.119)	(-0.704)
$\Delta\mathrm{RES}_{t-1}$	0.293	-0.021	-0.044	0.464	0.428	-4.188
	(1.192)	(-0.216)	(-1.172)	(0.731)	(0.582)	(-1.121)
$\Delta\mathrm{API}_{t-1}$	-0.148	-0.072	0.111	0.630	-1.855	-1.863
	(-0.334)	(-0.416)	(1.636)	(0.550)	(-1.398)	(-0.276)
$\Delta\mathrm{GDP}_{t-1}$	2.138	0.663	0.025	0.127	-8.193	6.471
	(1.315)	(1.047)	(0.101)	(0.030)	(-1.684)	(0.262)
$\Delta\mathrm{EXV}_{t-1}$	0.044	0.143	0.006	-0.049	-0.363	3.334
	(0.335)	(2.189)	(0.305)	(-0.147)	(-0.934)	(1.687)
$\Delta\mathrm{ERV}_{t-1}$	0.174*	1.341	0.174	0.038	-0.383	0.007
	(1.893)	(0.958)	(1.893)	(1.072)	(-1.390)	(0.518)
$\Delta\mathrm{OPC}_{t-1}$	-0.011	0.007	-0.001	-0.069	0.025	-0.298
	(-0.866)	(1.325)	(-0.463)	(-2.103)	(0.659)	(-1.532)
LHWP	-0.176*	-0.026	0.015	-0.026	0.557	-0.567
	(-2.260)	(--0.862)	(1.239)	(-0.128)	(2.396)	(-0.488)
Democracy	0.168*	0.018	0.023	0.014	-0.337	1.283
	(2.312)	(0622)	(2.046)	(0.074)	(-1.547)	(1.158)
Instability	-0.049	-0.149	-0.025	0.070	-0.969	-0.523
	(-0.289)	(-2.274)	(-0.965)	(0.161)	(-1.922)	(-0.204)
US crisis	-0.219	-0.106	0.027	-0.255	0.306	-1.495
	(-1.632)	(-2.019)	(1.297)	(-0.736)	(0.761)	(-0.732)
Asian crisis	-0.082	-0.075	-0.014	-0.020	0.507	-2.987
	(-0.455)	(-1.062)	(-0.492)	(-0.042)	(0.935)	(-1.085)
Indian crisis	-0.063	0.123	0.010	0.085	-0.351	-2.482
	(-0.345)	(1.721)	(0.367)	(0.180)	(-0.640)	(-0.889)

$\chi^2 = 0.867$ [0.648]

LM-statistic = 327.02 [0.422]

Jarque-Bera statistic = 13.24 [0.352]

White test statistic = 408.78 [0.643]

Cointegrating vector:

$$v_{t-1} \equiv \mathrm{RES}_{t-1} - 1.178\mathrm{GDP}_{t-1} + 0.043\mathrm{OPC}_{t-1} - 2.191\mathrm{API}_{t-1} - 0.728\mathrm{EXV}_{t-1} + 0.167\mathrm{ERV}_{t-1}$$

Notes: t-statistics in parentheses and p-values in square brackets; ** and * (specified only where ΔRES is the dependent variable) denotes significant at 5% and 10% critical level, respectively.

JCGIRM Journal of Corporate Governance, Insurance, and Risk Management (JCGIRM)
2015, Volume 2, Series 3

Pages 67-79

An Analysis of Machine Effectiveness on the Production Line by Using Overall Equipment Effectiveness (OEE) Method Based on Total Productive Maintenance (TPM) Principle (A Study Case of Ball Tea Machine in PT Kabepe Chakra)

Aysha Herdiwan[a,*], **Sri Widiyanesti**[b]

[a] Business Management of Telecommunication and Informatics, Faculty of Economics and Business, Telkom University, Bandung, Indonesia
[b] Business Management of Telecommunication and Informatics, Faculty of Economics and Business,, Telkom University, Bandung, Indonesia

ABSTRACT

Total Productive Maintenance (TPM) is an approach in Preventive Maintenance which can be used by a company to evaluate the effectiveness of the company's facility. This evaluation is conducted to improve the facility value of Overall Equipment Effectiveness (OEE) and to eliminate the main loss known as The Six Big Losses. TPM is a maintenance approach focusing on the equipment which is suitable to be implemented on the manufacture company and production industries. This research is conducted on the Ball Tea machine in PT Kabepe Chakra which is a production machine to dry tea. The calculation of OEE value is conducted based on the data in January-December 2014, the calculation results show that the OEE value is 59.30897433% and it is still under the World Class standard. The calculation of Six Big Losses shows that the percentage of the most dominant of machine losses is on the Set-Up and Adjustment Loss which is 42.6768183%. The research results can be used to show that the effectiveness of Tea Ball machine still has to be improved by focusing on the most dominant loss elimination.

ARTICLE INFO

Keywords:
Preventive Maintenance, Total Productive Maintenance, Overall Equipment Effectiveness, The Six Big Losses.

**Corresponding author:*
ayshaherdiwan@gmail.com (Aysha Herdiwan)
Widiyanesti.sri@gmail.com (Sri Widiyanesti)

Article history:

Article Submitted 14-04-2015
Article Accepted 20-06-2015

**Article previously published in EJEM 2015, vol 2, No. 3

1. INTRODUCTION

Along with the development of technology, today's production activity is more performed by using production machines. Moreover, there have been some businessmen who prefer machines for production (Rusadi, 2013). However, the performance of machine may not be always stable if it is used continuously in a long term. The industry machine is an important part to smoothen the production process; it is the reason why maintenance is so important (http://www.vibrasindo.com, 2015). One of the maintenance process methods which are developed to improve the productivity is Total Productive Maintenance (TPM). The indicator of the success of TPM implementation is determined by OEE (Overall Equipment Effectiveness) (http://shiftindonesia.com, 2012).

Overall Equipment Effectiveness (OEE) is the best practice metric which identifies the percentage of production time which is really productive in planning (Vorne Industries, 2013). The OEE value of

100% is a perfect production. The OEE value of 85% is considered as the World Class standard manufacture. The OEE value of 60% is a typical value for Manufacture Company. The OEE value of 40% is a low value but it is possessed by many manufacture companies. The OEE value can be easily improved through simple stages of specification (OEE Industry Standard, 2014).

The usage of machine and equipment itself increasingly improves. The very potential markets for domestic machine industry are food and beverage industry. Food and beverage industry in each year always purchases the capital goods around 15-20% from its budget to fix the machine (Dharmawan, 2008). The percentage amount of machine repair budget usage shows the low value of machine effectiveness so that there are still many spaces to repair the machine of food and beverage machine in Indonesia.

One of food and beverage Industry Company in Indonesia, especially in West Java, tea production company, PT. Kabepe Chakra. PT Kabepe Chakra uses the production machine technology in processing the tea. The tea processing consists of several stations; every station processes the average tea of 91.792,58 kg per month with the highest operational working hours which is in the drying station using Ball Tea in which it reaches 24 hours per day where it will influence the effectiveness of the machine (Kabepe Chakra, 2014). Thus, to maintain the performance and the effectiveness of the machine, the suitable maintenance activity is necessary to be conducted in order to minimize all forms of losses.

This research aims to find out the effectiveness level of Ball Tea machine used by the company and the losses of the machine so that the company can focus on the most dominant loss elimination to improve the OEE value.

2. THEORY AND HYPOTHESIS

2.1 Preventive Maintenance

Maintenance covers all activities related in maintaining the system equipment in order to keep working. The preventive maintenance covers the routine inspection and maintenance and maintains the facilities in a good condition. This activity is intended to build a system which will find the potential failure and to make a change or repair which will prevent the failure. The emphasis on the preventive maintenance is on the understanding of process and keeping it working without obstacles (Heizer and Render, 2005).

2.2 Total Productive Maintenance

Total Productive Maintenance (TPM) is a productive maintenance performed by all employees through a small group activity (Nakajima, 1988). The definition of TPM completely covers five those elements (Nakajima, 1988):

1. TPM aims to maximize the effectiveness of the equipment (Overall Equipment Effectiveness).

2. TPM makes a detailed system to expand the life of the equipment.
3. TPM is implemented by various departments (machine, operation, maintenance).
4. TPM involves each employee, from the highest management until the lowest level of employee.
5. TPM is based on the promotion from PM through the motivation management: autonomous small group activities.

2.3 Overall Equipment Effectiveness

TPM has a measuring tool to consider important points within it, namely Overall Equipment Effectiveness (OEE). OEE is a result from availability, performance, and quality (Borris, 2006). The formula of OEE calculation value is:

$$OEE = Availability \times Performance \times Quality \tag{1}$$

Availability Rate is a ration from the amount of time which can be used by the machine to produce a qualified product divided by the total of time in which the machine works. The mathematic formula of availability is:

$$Availability = \frac{Operation\ Time}{Loading\ Time} \times 100 = \frac{Loading\ Time - Down\ Time}{Down\ Time} \times 100 \tag{2}$$

Performance Efficiency or performance of equipment can be meant as the ratio from the amount of products divided by the amount of the products which should be produced (Borris, 2006). The formula of Performance Efficiency is:

$$Performance\ Efficiency = \frac{process\ amount \times theoretical\ cycle\ time}{operation\ time} \times 100 \tag{3}$$

Rate of Quality. The meaning of product quality is a ratio from the amount of the products which can be accepted divided by the overall amount of the products which are made (including the products that failed). The formula of Quality Product is:

$$Rate\ Of\ Quality = \frac{number\ of\ units\ produced - number\ of\ defects}{number\ of\ units\ produced} \times 100 \tag{4}$$

OEE Industry Standard is a recognized world class target where each factor of OEE has different values. It is shown in following table (Vorne Industries, 2008):

Table 1: OEE Industry Standard

OEE *Factor*	*World Class*
Availability	90.0%
Performance	95.0%

Quality	99.0%
OEE	85.0%

The world class OEE standard forms some hypothesis:

Hypothesis 1. The Availability level of Ball Tea machine used by Chakra Group Company in 2014 met the world class standard which is ≥ 90%.

Hypothesis 2. The Performance Efficiency of Ball Tea machine used by Chakra Group Company in 2014 met the world class standard which is ≥ 95%.

Hypothesis 3. The Rate of Quality Product of Ball Tea machine used by Chakra Group Company in 2014 met the world class standard which is ≥ 99%.

Hypothesis 4. The Overall Equipment Effectiveness of Ball Tea machine used by Chakra Group Company in 2014 met the world class standard which is ≥ 85%.

2.4 The Six Big Losses

Facilities suffer losses from things which prevent them to effectively operate and from problems caused by the errors and operational problems. TPM seeks to eliminate The Six Big Losses which become the main obstacles against the effectiveness of equipment to reach OEE (Nakajima, 1988). Steps of losses calculation refer to previous research (Hasriyono, 2009).

1. Equipment Failure: breakdown

$$Equipment\ Failure\ Loss = \frac{Total\ Breakdown\ Time}{loading\ time} \times 100 \quad (5)$$

2. Setup and adjustment: Retooling of the dead machine

$$Setup\ and\ Adjustment\ Loss = \frac{Total\ Set\ up\ and\ Adjustment\ Time}{loading\ time} \times 100 \quad (6)$$

3. Idling and minor stoppages: The abnormal operation from censor, the obstruction of the machine works, etc.

$$Idling\ and\ Minor\ Stoppage = \frac{Nonproductive\ Time}{loading\ time} \times 100 \quad (7)$$

4. Reduced speed The difference between the recoroded speed of equipment and the actual speed.

$$Reduced\ Speed = \frac{\text{Operation Time} - (\text{Theoritical Cycle Time } \times Processed\ Amount}{loading\ time} \times 100 \quad (8)$$

5. Defect in Process: The bad record and quality which have to be improved.

$$Defect\ In\ Process = \frac{Theoritical\ Cycle\ Time\ xRework}{Loading\ Time} \times 100 \quad (9)$$

6. Reduced Yield: The needed time from start-up the machine until the stable production process.

$$Reduced\ Yield = \frac{Theoritical\ Cycle\ TimexScrap}{Loading\ Time} \times 100 \quad (10)$$

3. METHODOLOGY

The type of the research is basic research. Basic research is general knowledge as a tool to solve the practical problem although it does not give the thorough answer for each problem, (Nazir, 2005).

This research is a research which uses a mixed method based on the type of the data and its processing. The mix method research is an approach of research which combines or associates the qualitative and quantitative forms (Creswell, 2010). The qualitative approach of this research is used when the primary data are being collected from the interview to find an idea from the problems that may occur on the machine that can cause a loss in the production process. The interview is conducted against three resources (source triangulation) in order that the obtained data are valid. The resources are selected based on the consideration of their knowledge of machine; production, machine technician and general affairs. The quantitative approach of this research is used when the secondary data are being processed to calculate the value of Overall Equipment Effectiveness and the identification of losses. The needed secondary data are Loading Time, Down Time, Planned Downtime, Number of Defect (reduced yield/reject and rework component, Output, Theoretical Cycle Time, and Actual Cycle Time. The used secondary data are the data of Ball Tea machine in 2014. This machine is selected based on the level of influence of the machine against the product quality, machine usage frequency, and the damage frequency.

The technique of data analysis which is firstly used is Fishbone Diagram. Fishbone Diagram of his research is used to process the interview results regarding the condition and the performance of the machine to dig and learn the cause of the problem which may cause losses against the machine. The Fishbone Diagram technique refers to the previous research (Hasriyono, 2009; Rinawati and Dewi,

2014). The causes are usually divided into the main cause from methods, material, measurement, people, equipment, and environment (Besterfield et al., 2003).

The further analysis is conducted by calculating the percentage of OEE by multiplying the three constituent factors of OEE namely availability, performance, and quality based on each formula.

The calculation results are then compared to the attainment with world class OEE standard. The calculation of OEE value has been conducted on some previous research (Afefy,2013; Almeanazel, 2010; Hasriyono, 2009; Rinawati and Dewi, 2014).

The further analysis is by calculating the six big losses with each formula based on the theory of The Six Big Losses. Sorting the percentage of the greatest or the most dominant losses is depicted through the Pareto diagram so that the causes can be analysed and the repair can be focused on the losses. The usage of Pareto diagram is for sorting the percentage of the losses, based on the research (Hasriyono, 2009; Rinawati and Dewi, 2014).

4. RESULTS

4.1 Descriptive Data

The early used data are the results from interviews with some related parties, they are the production department, the machine technician, and the general Affairs. The interview results data are then processed by using Fishbone diagram so that the link of the problem becomes clear.

The Fishbone diagram on the picture 1 shows that the root cause of the low value of OEE on the Ball Tea machine can be identified into four categories: Material/Spare part, Machine, People, and Method. The problems of Material/Spare part factor are that the spare part suffers the damage because of the worn-out, the spare part is not original, the spare part is sometimes not available in the company storage, and the hard tea raw materials can damage the machine.

The problems of machine factor are that the machine has the highest working hours so that it needs a special treatment, then, the machine has a high delay time so that the existing working hours becomes less, the technical problems often occurs on the machine where the machine often suffers the breakdown.

The problems of the people are that the machine operators are still lack of awareness about the importance of machine inspection, the operator does not check and report to the technician when there are peculiarities on the machine. The machine operators are also still lack of knowledge, when the machine suffers the congestion, they tamper the machine without a clear understanding and procedure.

The problems of the processing method are the screening of raw materials with Roll causes a very strong vibration so that the Roll will be loose sooner or later and its performance decreases, the machine is also set in a very high temperature to dry the tea leaves so if it is not treated well, the machine will be easily broken.

Those problem are then adapted with the theory of Total Productive Maintenance which focuses on the machine to calculate the OEE and the Six Big Losses in details.

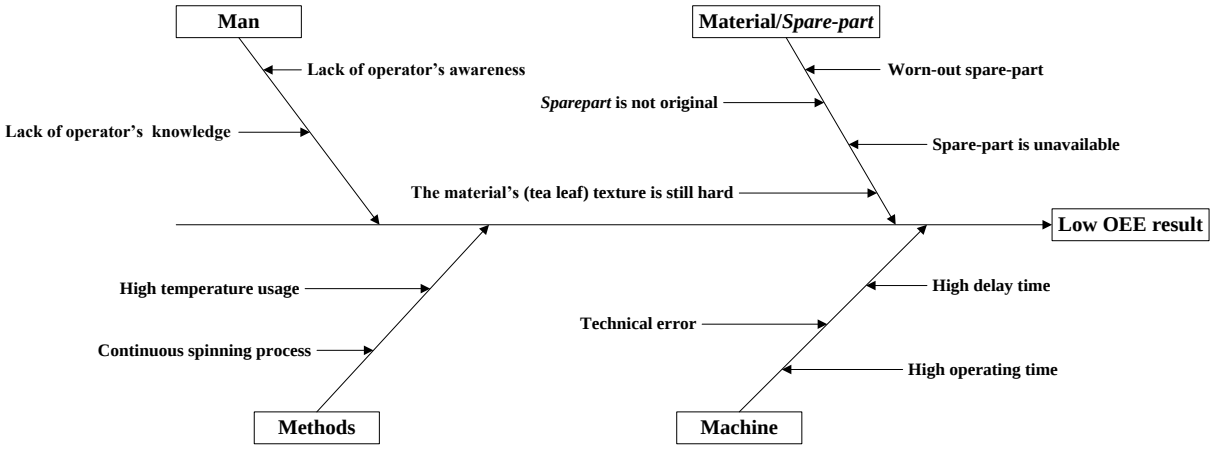

Figure 1: Fishbone Diagram of Problem Causes of the Machine

The needed secondary data are Loading Time, Down Time, Planned Downtime, Number of defect (reduced yield/reject and rework component), Output, Theoretical Cycle Time, and Actual Cycle Time. Those data are obtained based on the data of Ball Tea machine in 2014 in the company. Table 2 and table 3 are the outcome of the collected data recap:

Table 2: Delay Time of Machine

Month	Available Time (Hour)	Delay				Total Delay (Hour)
		Schedule Shut-down (Hour)	Warm-up Time (Hour)	Planned Downtime (Hour)	Machine Break (Hour)	
January	744	168	48	96	2.17	314.17
February	672	96	48	112	1.50	257.50
March	720	120	50	100	0.67	270.67
April	720	120	50	100	1.17	271.17
May	744	192	46	92	0.42	330.42
June	720	120	50	100	2.75	272.75
July	744	96	54	108	0.92	258.92
August	744	120	52	104	0.42	276.42
September	720	96	52	104	1.17	253.17
October	744	120	52	104	0.17	276.17
November	720	120	50	100	1.25	271.25
December	744	120	52	104	4.50	280.50

Table 3: Working Hours and Production Machine

Month	Item						
	Loading Time (Hour)	Down Time (Hour)	Total Production (kg)	Good Product (kg)	Number Of Defect (kg)	Theoritical Cycle Time (hour/kg)	Actual Cycle Time (hour/kg)
January	648	218.17	86,581	85,800	781	0.004323842	0.007484321
February	560	145.5	81,209	79,100	2,109	0.004253391	0.006895787
March	620	170.67	102,946	101,399	1,547	0.003758508	0.006022575
April	620	171.17	107,563	106,600	963	0.003593144	0.005764064
May	652	238.42	101,010	100,500	510	0.003588162	0.006454806
June	620	172.75	101,528	90,800	10,728	0.003793354	0.00610669
July	636	150.92	78,151	77,599	552	0.005305954	0.008138092
August	640	172.42	68,435	66,900	1,535	0.005877414	0.00935194
September	616	149.17	85,762	85,300	462	0.004657027	0.007182668
October	640	172.17	58,374	57,738	636	0.006894028	0.010963785
November	620	171.25	101,357	99,563	1,794	0.003812477	0.006116992
December	640	176.5	128,595	126,901	1,694	0.003100488	0.004976865

4.2 Calculation Results

The analysis of the machine effectiveness is conducted with a calculation by using OEE formula as well as the losses of the machine which cause the low value of OEE. The calculation of OEE and the losses of the machine are as elaborated as following:

1. The calculation of Availability, Performance, Quality, and OEE.

   Availability Ratio is calculated to find out how much the ratio of the amount of the time which can be used by the machine to produce products with the total of the time when the machine works. To calculate the Availability Ration, it needs the data of Loading Time which has been found out previously and the data of Operation Time.

   Performance Efficiency is the performance of the machine which is showed by the ratio of the products made by the amount of products which should be produced in a cycle. The calculation of Performance Efficiency uses the data of Good Product Ideal Cycle Time, and Operation Time of Ball Tea machine.

   Rate of Quality Product is calculated to find out the level of product quality which is produced by the machine. The calculation of Rate of Quality Product uses the data of Good Product and Total Broke which have been known.

   Overall Equipment Effectiveness shows the overall effectiveness value of machine based on the factors of Availability, Performance Efficiency, and Rate of Quality which have been obtained.

   The calculation results of OEE and the three factors are presented in table 4:

Table 4: The Calculation Results of Availability, Performance, Quality, and OEE

Month	Availability (%)	Performance Efficiency (%)	Rate Of Quality Product (%)	OEE (%)
January	66.3317901	86.3098526	99.08974359	56.72974056
February	74.0178571	81.1684437	97.33375474	58.47728541
March	72.4725807	84.81716947	98.47434393	60.5313831
April	72.3919355	85.33948307	99.09662289	61.22080705
May	63.4325153	87.19239741	99.49253731	55.02766172
June	72.1370968	77.01207446	88.18502203	48.99054936
July	76.2704403	84.88017506	99.28865063	64.27796641
August	73.059375	84.09234144	97.70553064	60.02767816
September	75.7840909	85.09401146	99.45838218	64.138446
October	73.0984375	85.08376934	98.89847241	61.5098119
November	72.3790323	84.58643272	98.19812581	60.11968285
December	72.421875	84.88780454	98.66510114	60.65667939
Average	71.98308554	84.20532961	97.82385727	59.30897433

2. The Calculation of The Six Big Losses

Based on the principle of TPM, the losses of the machine are classified into six types which are called The Six Big Losses. Those Losses are: Equipment Failure Loss, Set-up and Adjustment Loss, Idling and Minor Stoppage, Reduced Speed, Yield/Scrap Loss, and Rework (Davis,1995). On the Ball Tea machine which is used by PT Kabepe Chakra to dry the tea, the losses have been identified in accordance with the theory of The Six Big Losses.

Table 5: The Calculation Results of the Six Big Losses

No	Six Big Losses	Total *Time Loss* (Hour)	Percentage (%)	Cumulative Percentage (%)
1	Set up and Adjustment	2,092	42.67681828	42.6768183
2	Idling and Minor Stoppage	1,845.11	37.64026012	80.3170784
3	Reduced Speed Loss	853.013013	17.40147292	97.7185513
4	Scrap/Yield Loss	94.72567189	1.932404534	99.6509559
5	Equipment Failure Loss	17.11	0.349044149	100
6	Rework Loss	0	0	100
	Total	4,902		

5. DISCUSSION

5.1 Overall Equipment Effectiveness

The calculation results show that the value of Availability is only around 63.43251534% until 76.27044025%, the average of the level of available machine (availability) in 2014 is 71.98308554% which is still under the world class standard which is 90%. The Performance Efficiency value is around 77.01207446% until 87.19239741%, the average of the level of performance efficiency in 2014 is 84.20532961%, and this value is still under the world class standard which is 95%. The Quality value of the machine is around 88.18502203% until 99.49253731%, although in January, April, May, and September, the value of machine Quality has met the world class standard which is over 99%, however, when it is averaged in a year, the value of Quality becomes 97.82385727% that has not met the standard by 99%. The combination of those three factors produces an average value of OEE which is 59.30897433%. This value has not met the world class standard of 85% and it still needs to improve, however, according to Vorne Industries (2013), the OEE value has been good enough for the standard of industry since the average of industrial machine commonly still produces the OEE value of 35% until 45%.

The compliance of OEE value criteria on the Ball Tea machine in 2014 at PT Kabepe Chakra has been obtained based on the calculation is as following:

Table 6:The Comparison of OEE Value

OEE Factors	Results	World Class	Meet or does not meet the standard
Availability	71.98308554%	90%	Does not
Performance Efficiency	84.20532961%	95%	Does not
Rate Of Quality	97.82385727%	99%	Does not
OEE	59.30897433%	85%	Does not

The OEE value and those three factors are in table 5, thus, the conformity with the proposed hypothesis are:

Hypothesis 1 that is “the level of Availability of Ball Tea machine which is used by Chakra Group Company in 2014 met the world class standard which is ≥ 90%” is rejected.

Hypothesis 2 that is “the level of Performance Efficiency of Ball Tea machine which is used by Chakra Group Company in 2014 met the world class standard which is ≥ 95%” is rejected.

Hypothesis 3 that is “the level of Rate of Quality Product if Ball Tea machine which is used by Chakra Group Company in 2014 met the world class standard which is ≥ 99%” is rejected.

Hypothesis 4 that is “the level of Overall Equipment Effectiveness of Ball Tea machine which is used by Chakra Group Company in 2014 met the world class standard which is ≥ 85%” is rejected.

5.2 The Six Big Losses

The order of Six Big Losses percentage on the machine is depicted in the Pareto Diagram:

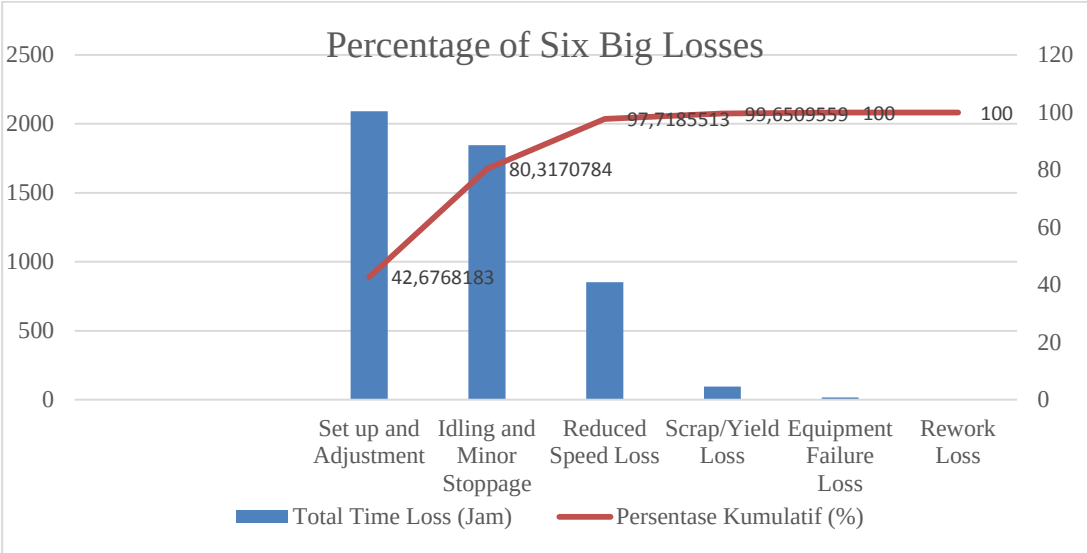

Figure 2: Pareto Diagram of Six Big Losses Percentage

The percentage of losses on the machine which causes the machine not working optimally is calculated based on the theory of The Six Big Losses and is sorted based on its percentage as following:

a. The most dominant loss is the set-up and adjustment loss. The Percentage of set-up and adjustment loss in 2014 is 42.6768183%, it is caused by the time length of the machine set-up during the heating and during the machine stoppage schedule so that it produces the high time total of set-up and adjustment.
b. The second loss is the loss which is caused by the idling and minor stoppage. The total of loss percentage in 2014 is 37.64026012%. This loss is caused by the existence of unproductive time where the machine cannot work.
c. The third loss is the reduced speed loss with the percentage total of 17.40147292%. This loss is caused by the machine which operates under the standard of the speed.
d. The fourth loss is the scrap/yield loss. The scrap produced by the machine is in forms of tea shoots which cannot be sent because it is scorched during the drying process in the Ball Tea. The calculation of the loss based on the production data in 2014 is 1.932404534%.
e. The percentage of the lowest loss is the equipment failure loss with the percentage total of 0.349044149% in 2014. The failure occurs only in form of small damage on some parts of the machine like chain, clutch, roll, etc in which the repair does not take long.

6. CONCLUSSION

The average of the effectiveness level of Ball Tea machine in January-December 2014 is 59.30897433%, this average of the effectiveness level of Ball Tea machine is still under the world class standard which is 85%. The effectiveness of Ball Tea machine which does not meet the standard is caused by those three factors, they are availability, performance, and quality by which each of them does not meet the world class standard. It shows that the Ball Tea machine has the total of loss which is 40.69102567% which means that there are still many things which have to be improved in order that the performance is getting better. It is in accordance with the aim of TPM that is to improve OEE by eliminating the loss suffered by the machine.

The identification of the loss on the Ball Tea machine in 2014 is Set-up and Adjustment (42.67681828%), Idling and Minor Stoppage (37.64026012%), Reduced Speed (17.40147292%), Scrap/Reduced Yield (1.932404534%), and Equipment Failure Loss (0.349044149%). Those losses are caused by the amount of delay time and defect product. The Six Big Losses which are not identified is re-work loss. The company can improve the OEE value by focusing on the most dominant loss elimination which is on the Set-Up and Adjustment. The management of maintenance which can be applied to reduce the loss in the machine based on the TPM principle is education and training, the autonomous maintenance principle, planned maintenance, and focused improvement.

REFERENCES

Afefy, I. H. (2013), "Implementation of Total Productive Maintenance and Overall Equipment Effectiveness Evaluation",International Journal of Mechanical & Mechatronics Engineering, 13 (1), 69-75

Almeanazel, O. T. R. (2010), "Total Productive Maintenance Review and Overall Equipment Effectiveness Measurement", Jordan Journal of Mechanical and Industrial Engineering, 4 (4), 517-522.

Besterfield, D. H, et al. (2003), Total Quality Management, Pearson Education, New Jersey

Borris, S. (2006),Total Productive Maintenance, McGraw-Hill, United States of America

Creswell, J. W. (2010), Research Design : Pendekatan Kualitatif, Kuantitatif, dan *Mixed*.Pustaka Pelajar, Yogyakarta

Davis, R. K. (1995), Productivity Improvements Through TPM, Prentice Hall, United Kingdom

Dharmawan, T. (2008),"Pakai Mesin Lokal Dapat Insentif", available at: http://bisniskeuangan.kompas.com/read/2008/12/03/19554088/Pakai.Mesin.Lokal.Dapat.Insentif (accesed 17 Maret 2015)

Hasriyono, M. (2009). “Evaluasi Efektivitas Mesin Dengan Penerapan Total Productive Maintenance (TPM) di PT Hadi Baru”, Tugas Akhir Sarjana pada Fakultas Teknik Universitas Sumatera Utara.

Heizer, J and Barry, R. (2005), Manajemen Operasi (edisi 7), Salemba Empat, Jakarta

Kabepe Chakra, (2014), “About Us”, available at: http://www.chakratea.com/index.php?option=com_content&view=article&id=1&Itemid=3(accesed 29 November 2014)

Nakajima, S. (1988),Introduction to TPM Total Productive Maintenance, Productivity Press, Cambridge.

Nazir, M. (2005), Metode Penelitian. Ghalia Indonesia, Bogor

OEE Industry Standard (2014), “OEE – Overall Equipment Effectiveness: The OEE Industry Standard”, available at:http://oeeindustrystandard.oeefoundation.org/, (accessed 29 November 2014)

Rinawati, D.I dan Nadia C. D. (2014), "Analisis Penerapan *Total Productive Maintenance* (TPM) Menggunakan *Overall Equipment Effectiveness* (OEE) dan *Six Big Losses* Pada Mesin Cavitec di PT. Essentra Surabaya", Jurnal Penelitian pada Fakultas Teknik Universitas Diponegoro, 978-602-1180-04-4, 21-26.

Rusadi, I. (2013), “Upah Buruh Naik, Pengusaha Beralih ke Mesin Hindari Kerugian”, available at: http://www.merdeka.com/uang/upah-buruh-naik-pengusaha-beralih-ke-mesin-hindari-kerugian.html,(accessed 30 Oktober 2014)

Shift Indonesia (2012),“Mengenal Total Productive Maintenance (TPM) Sebagai Metode Perbaikan Praktis”available at: http://shiftindonesia.com/lean-manufacturingmengenal-total-productive-maintenance-tpm-sebagai-metode-perbaikan-praktis/, (accessed 29 November 2014)

Vibrasindo (2015),“Manajemen Pemeliharaan Mesin Pabrik”, available at: http://www.vibrasindo.com/blogvibrasi/detail/26/manajemen-pemeliharaan-mesin-pabrik , (accessed 17 Maret 2015)

Vorne Industries (2008), The Fast Guide to OEE. United State of America: Vorne Industries.

Vorne Industries (2013)“Overall Equipment Effectiveness”, available at:http://www.leanproduction.com/oee.html, (accessed 29 November 2014)

JCGIRM Journal of Corporate Governance, Insurance, and Risk Management (JCGIRM)
2015, Volume 2, Series 3

Pages 80-90

Analysis of Desktop Browser Positioning Based on Users Perception in Indonesia

Osa Omar Sharif[a], Zaenal Ali Alatas[b], Dini Turipanam Alamanda[c], Arif Partono Prasetio[d]
[a, c, d] Lecturer of Economics and Business Faculty, Telkom University
[b] Management Program Study, Faculty of Economics and Business, Telkom University

ABSTRACT

The increasing of internet users affecting the choice of browsers and for now, desktop users still dominate the usage. The research's goal is to analyze the well-known browser such as Mozilla Firefox, Google Chrome, Internet Explorer, Opera, and Safari from the Indonesian customer point of view. The variables used in the analysis are the speed to display HTML, the speed of executing ECMA Script, the browser security, the need of hardware resource, and the general feature of each browser. We distribute questionnaire to 400 users of the five browsers in Indonesia. The multivariate statistics of multidimensional scaling used to process the data. The research found that Mozilla Firefox is the best browser on speed criteria when displaying the HTML and general feature, as the Google Chrome win the heart of Indonesian users on the speed criteria when executing ECMA Script. As usual, the Apple Safari excels on the security and the hardware resources consumption (KHR1). The Internet Explorer considered the best on the hardware resources consumption criteria.

ARTICLE INFO

Keywords:
Desktop Browsers, Positioning, Perceptual Map, Multidimensional Scaling
**Corresponding author:*
osaomarsharif@gmail.com
(Osa Omar Sharif)

Article history:

Article Submitted 14-04-2015
Article Accepted 20-06-2015

**Article previously published in EJEM 2015, vol 2, No. 3

1. INTRODUCTION

The increasing internet users especially in Asia had form an internet culture. The Asian has huge population which reach 3,9 billion people and 44.8% of them already using internet (Worldstats, 2013). The dawn of the internet drive the growth of the website which provide enormous information, then followed by the development of the browsing application to enhance the experience of surfing the internet. The application called web browser or just simply browser. In business terms, browsing is a store leisure activity whose motives are mainly recreational (Lombart, 2004). Kim and Kim (2008) stated that if consumers having high shopping enjoyment, they are more likely to be browsers. The internet and the countless thousands of website provide information for the user. In fact people now accustom to find the information from the internet. This development is supported by the browsers which act as the gateway to the information. Browsers, now is not just an application to open the websites but also function as the hub for the internet users. This affects the emergences of various browser applications. The developers try to offer the browsers which provide easier access, ease of use, better navigation and the appearance.

Browser can be accessed from several gadgets. Besides the old ways using the desktop computer, now user can use their browser from notebook, phone, or tablet. They become more mobile. The

figure from Net Application find that the majority of the user using the browser from the desktop which reach 88%. Compare to the smartphone and other mobile browsing which consist of 11.4%. This clearly prove that the desktop is still become the choice for the internet users.

In 1995, Microsoft released Internet Explorer which then become pioneer in the browser wars. At the end, Microsoft win the market and the closest rival, Netscape try to made their browser as open-source with the new name, Mozilla on 1998. In the mid 90's, the Opera shown up as the new browser (Grosskurth and Godfrey, 2011).

There are five web browsers which very well known by the users. top five in The most widely used is the Google Chrome which represent 34,88% of users. The next in line is the Internet Explorer (IE) with 32% users, Mozilla Firefox with 22,47% users, Safari with 7,54% users, and Opera with 1,49% users. The other browser represent only 1,62% users. Those ranking based on the Statcounter (2013) which measure the web popularity by the hits from each browsers. From the same sources, the internet users in Indonesia on 2013 show the differences of the browsers popularity. The first choice is the Mozilla Firefox with 63,5% users, followed by Google Chrome with 26,95% users. The Microsoft Internet Explorer (IE) on the third place with 3,02% users, next is Safari with 2,49% users, and Opera placed fifth with 2,08% users, while other browser consist only 1,96% users.

Hawkins et al. (2000) investigate the awareness of the Internet security in various industries ranging from the public and private sectors. Pentina et al. (2011) confirmed that browser satisfaction have a mediating role to increase sales and traffic for online business. Further research by Iwata et al. (2010) examined the children-oriented web browser, which ultimate aims is to keep children's interest on pages and help them to easily understand the contents of the pages. Other research regarding browsing experience conducted by Nsairi (2012) whose analyzed the browsing experience in retail stores through perceived value. To expand the discussion about the browser management, we analyzed the Indonesia customer perception based on the browser superiority. This research analyzed the browser positioning using different method compare to Statcounter (2013). At the end, we also compare each browsers superiority using the perceptual mapping method.

2. LITERATURE REVIEW

2.1 Brand Positioning

The word 'Positioning' is related with the activities to shape or influence the preferences of consumers. In the end this effort aimed to ahieve high consumer loyalty, consumer-derived brand equity, and customer willingness to search for the certain brand (Keller, 2003; Schiffman and Kanuk, 2010). The brand positioning relatively similar to the brand image construct, which is defined as "the concept of a brand that is held by the consumer. This concept inside the customer mind is largely a subjective and perceptual phenomenon that is formed through consumer experience and interpretation, whether reasoned or emotional" (Dobni and Zinkhan, 1990).

In Kotler's theory, segmentation, targeting and positioning is described as a sequential process (Laforet, 2010). Kotler and Keller (2012) define brand positioning as the "act of designing a company's offering and image to occupy a distinctive place in the minds of the target market. This mean that the company deliberately create the image of their product, then they make effort to implant this image into the customer mind. They want their customer feel, think their product is the ultimate solution for their certain problems. Peter & Olson (2008) discussed several categories of brand positioning:

(1) product attributes (consumers seek benefit from product features such as quality and price);

(2) uses or applications of the product;

(3) product user (such as based on consumer lifestyles);

(4) product class (a product could be substituted); and

(5) competitors such as position to be a market leader.

Fill (1999) states that the successful positioning can only be achieved by adopting a customer's perspective and by understanding how customers perceive products in the class, and how they attach importance to particular attributes that can be grouped under a construct (Sweeney & Soutar, 2001). The end result of the positioning is the creation of a customer-focused value proposition. As we all know, the value proposition become the strong reason why the target market should buy the product" (Kotler, 2003, p. 308).

2.2 Consumer Attitude and Perception

There are several definition regarding the "Attitude." One of them came from Schiffman and Kanuk (2010). They regard attitude as a learned predisposition to behave in a consistently favorable or unfavorable manner with respect to a given object." Solomon et al. (2002) argue that attitudes exist simply because of the fact that they perform a particular function to a person; this means that they are determined by motives of an individual. Individuals with good feelings may have favorable ad attitudes (Edell and Burke, 1987). In fact, consumer attitude itself is becoming one subset of feelings, and the traditional marketing paradigm with the optimal function as the ultimate objective is turning into a new one with stress more on feelings and relationships (Hirschman and Holbrook, 1982).

According to Suryani (2012), a perception process initiated by a stimuli that our senses know. Stimuli can lead to the perception of a variety of shapes, like everything that can be smelled, seen, heard, touched. These stimuli would be the sensory organ called sensory receptor. Direct or immediate response from the sensory receptor organs is called sensation. The level of sensitivity in sensation between one individual with another individual is different. The difference in sensitivity occurs because of the ability of the receptor among individuals that are not the same. In addition to the sensitivity factor, other factors that influence the intensity of the stimuli. The conceptual framework is describes on Figure 1.

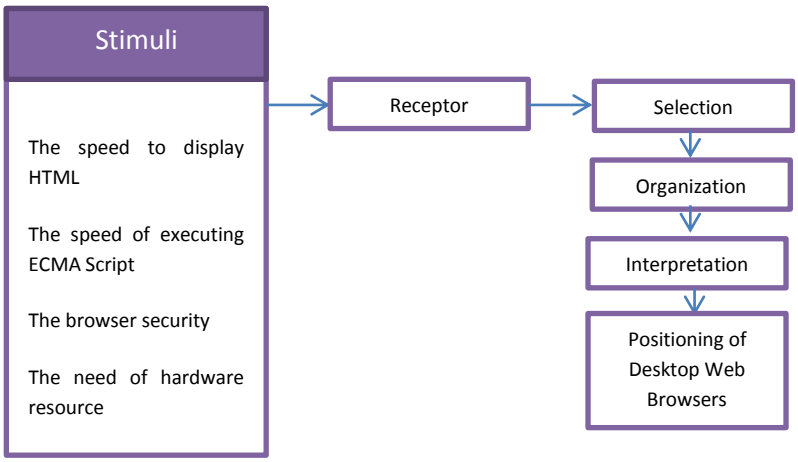

Figure 1: Conceptual Framework

2.3 Browser Profile

Mozilla Firefox is the free platform browser which developed by Mozilla and hundred of the volunteer. Firefox can run on various operating system let say Microsoft Windows, Linux, Mac OS X, dan FreeBSD. The newest version is 24.0, which released on August 24 Agustus 2013 with of course several improvement and bug fixes. On the other hand, Google Chrome is the simple, speed, and secure browser. Chrome specially design for the modern websites. And already prove what is intended for. Chrome speed start right after we open the browser, then when web pages loading. Equipped with useful personal setting, Chrome easily enrich with its application, extension and themes. The user can get them through the Web Store Chrome. One of the strength is if you open Chrome using your ID, then you have the exact Chrome setting. So you do not have to be worry about your bookmark. They appear the same on every computer you log on.

As the default browser, Internet Explorer (IE) of course freely distributed alongside the released of Windows operating system. IE start its operation in 1995 and currently the newest version is IE 9 which is available if you using Windows 7, Windows Vista, dan Windows Server 2008. The next web browser was initially design for mobile, The Opera web browser. Opera was developed by the Opera Software from Oslo, Norwegia. Opera can also run in various operating system such as Microsoft Windows, Mac OS X, Solaris, FreeBSD dan Linux. Opera introduce the vector graphics library called Vega, which able to manage the browser rendering. Our next browser is exclusively develop and used for Apple system, the Safari. Its initial intend purpose was for Mac Computer. Now, Safari Browser can run on Mac, iPad, iPhone, dan iPod touch. Safari began its service for Mac OS since 1997. Now, Safari can also run on Windows operating system and the recent version is 5.1.7.

3. METHODOLOGY

This study analyze the Indonesian customer's perception toward the top five brands of web browsers based on Statcounter (2013) which are Mozilla Firefox, Google Chrome, Internet Explorer, Safari and Opera. Online questionnaire was conducted in five-month period, from September 2013-Maret 2014. Using non-purposive probability sampling, the total sample size of our survey was 400 respondents. Items measurement was measured with five-point Likert-type scale.

3.2 Identification of Variable

Based on the theory from Limantara (Sopyani, 2012) about the general feature of the browser and Matamaya (Sopyani, 2012) about the browser performance measurement, we use the operating variables such as:

a. The speed of displaying the HTML (KBH): displaying speed can be measured by calculating time needed by the browser to open the certain size of an HTML file. The browser speed than compare with the speed of other browser.
b. The speed when executing the ECMAScript (KME). ECMAScript is the official name of Javascript (needed to play video and music media). Javascript developed by ECMA (European Computer Manufactures Association). The test which frequently used to measured the speed of executing ECMAScript is the SunSpider online test.
c. The browser security (KB): as we all know, there are not any software which bugs-free. Bug in a browser can be used by the web designer and hackers to seek the crack in computer security. They usually done that to steal or to trasnfer the virus. That is why the browser security is very important.
d. Hardware Resource requirement. This kind of performance measure the amount of hardware consumption needed by the browser. The requirement can be identify from several factors; the size of the installer package, the space needed after installation, (KRH 1), and the amount of memory used when operating the browser (KRH 2).

3.2 Statistical Technique Used (Multidimensional Scaling)

Multidimensional Scaling (MDS) is a technique for the analysis of similarity or dissimilarity data on a set of object. One of the purpose of MDS, it represents (dis) similarity data as distances in a low-dimensional space in order to make these data accessible to visual inspection and exploration. The most frequently used and the most natural distance function is the Euclidean distance (Ed) which represent by the formula (Borg and Groenen, 2005):

$$d_{ij}\ (X) = \sqrt{(x_{i1} - x_{j1})^2 + (x_{i2} - x_{j2})^2}$$

For technical reasons, most MDS algorithms, like the Alternating Least-Squares Scaling (ALSCAL) algorithm in the Statistical Package for the Social Sciences (SPSS), are more efficient with

dissimilarity measures. As such, data collected with the intention of subsequent MDS analyses is generally dissimilarity data.

4. RESULT AND ANALYSIS

4.1 Respondent's Profile

We gather 400 respondents which 62% of them were male and the 38% were female. The age distribution of the respondent is 22% below 20 years, 32% between 20-25 years, 27% between 25-30 years and 19% above the 30 years. Respondent's profession dominated by the 49% of students, 18% civil servant, 22% private company employees, 8% entrepreneur, and other profession such as housewives and BUMN employees for 3%. The reason for using the internet are 33% of information searching, 11% using internet to communicate, 6% for gaming, 12% for business, and 38% to get some entertainment (Movie/video and music).

4.2 Perceptual Map

The analysis was conducted by calculating the euclidean distance of each position of web browsers on the related dimensions. In concept, euclidean distance, the closer the web browsers toward the related dimensions, the better the web browsers position based on the dimensions. The calculation of web browsers based on dimensions and Euclidean distance are presented on Table 1 and Figure 2.

Table 1: Euclidean Distance of Web Browser

Web Browser	Coord. of Web Browser		Coord. of Dimension		*Euclidean Distance*			
	x	y	x	y	$(x_i - x_{i-1})^2$	$(y_i - y_{i-1})^2$	*Ed*	Rank
The speed to display HTML								
Firefox	0.0045	-0.5811	0.5419	-1.0022	0.2888	0.1773	0.6827	1
Chrome	1.1445	0.5750	0.5419	-1.0022	0.3631	2.4876	1.6884	2
IE	-1.9344	1.3437	0.5419	-1.0022	6.1321	5.5032	3.4111	5
Opera	-0.8654	0.4570	0.5419	-1.0022	1.9805	2.1293	2.0273	3
Safari	-1.5365	-0.954	0.5419	-1.0022	4.3197	0.0023	2.0790	4
The speed of executing ECMA Script								
Firefox	0.0045	-0.5811	0.9939	0.0287	0.9789	0.3719	1.1622	2
Chrome	1.1445	0.5750	0.9939	0.0287	0.0227	0.2984	0.5667	1
IE	-1.9344	1.3437	0.9939	0.0287	8.5749	1.7292	3.2100	5
Opera	-0.8654	0.4570	0.9939	0.0287	3.4570	0.1834	1.9080	3
Safari	-1.5365	-0.954	0.9939	0.0287	6.4029	0.9657	2.7145	4
The browser security								
Firefox	0.0045	-0.5811	-1.8589	-0.5405	3.4723	0.0016	1.8638	3
Chrome	1.1445	0.5750	-1.8589	-0.5405	9.0204	1.2443	3.2039	5
IE	-1.9344	1.3437	-1.8589	-0.5405	0.0057	3.5502	1.8857	4
Opera	-0.8654	0.4570	-1.8589	-0.5405	0.9870	0.9950	1.4079	2
Safari	-1.5365	-0.954	-1.8589	-0.5405	0.1039	0.1710	0.5243	1
The need of hardware resource (KHR1)								
Firefox	0.0045	-0.5811	0.9338	0.9885	0.8636	2.4636	1.8241	2
Chrome	1.1445	0.5750	0.9338	0.9885	0.0444	0.1710	0.4641	1
IE	-1.9344	1.3437	0.9338	0.9885	8.2266	0.1262	2.8901	4
Opera	-0.8654	0.4570	0.9338	0.9885	3.2371	0.2825	1.8761	3
Safari	-1.5365	-0.954	0.9338	0.9885	6.1024	3.7733	3.1426	5
The need of hardware resource (KHR2)								
Firefox	0.0045	-0.5811	0.9921	0.0236	0.9754	0.3657	1.1580	2
Chrome	1.1445	0.5750	0.9921	0.0236	0.0232	0.3040	0.5721	1
IE	-1.9344	1.3437	0.9921	0.0236	8.5644	1.7427	3.2105	5
Opera	-0.8654	0.4570	0.9921	0.0236	3.4503	0.1878	1.9074	3
Safari	-1.5365	-0.954	0.9921	0.0236	6.3938	0.9557	2.7110	4

Internet users regards that speed of displaying the HTML is very important. The faster the HTML file displayed on the browser, the easier the users can get access to the information, entertainment, and surfing the web. This facts correspond with the Matamaya (Sopyani, 2012), which argue that the speed of displaying the HTML is one of dimension which consider as an advantage in the browser performance. To display the HTML faster every browser have their own unique system which can support the best performance.

As for the ECMA Script which is the official name for the Javascript (needed to access the media such as video and music) developed by ECMA. This dimension is required especially by the users who actively access the video and audio content. The faster one browser can display the content, the more content the user can access in certain time. Matamaya (Sopyani, 2012) explained that the speed to execute the ECMA Script is one of the important dimension if we are going to measure the browser performance. The result showed that Google Chrome has the advantage when executing the ECMA Script.

Desktop Browser merely a software run on computer to access the internet. As software, Browser also exposed to bugs. Browser with bugs can be used by the web developers or hackers to track and steal the user information. This is related with the security. This make the security as the next important thing a browser should consider. A good browser will have the high end security which can guarantee their users. They need to become immune to the virus and others hacking methods.

Matamaya (Sopyani, 2012) argue that the security dimension is also important for internet users. The more secure the browser, the more advantage the browser has compare to their competitors. The result from the perceptual mapping showed that Safari is the browser with the highest security level.

Matamaya (Sopyani, 2012) regard the hardware consumption when installing the browser is also an important attribute to consider by the internet users. The more hardware consumption will decrease the positive perception of the browser. This measured by the used of the memory or storage for installation. User prefer browser which has less memory consumption. The less the better they said. The perceptual mapping showed that Safari is the browser with the lowest consumption. The other hardware consumption is related with the RAM. The more RAM needed mean that the browser will used up more power. This mean that it might hold up the browser performance. This can be saw when users use other program or open several browser tab at once. This practice will decrease the browser performance if they need a lot of RAM. Once again in this case, the less consumption the better. The result showed that Internet Explorer is the Browser with the least RAM requirement.

The next discussion will explore the general feature of the browser. This also become important because user need attractive and interactive browser (Limantara on Sopyani, 2012). This general feature also become the advantages for the browser. Several feature can be state here are Tabbed Browsing, Bookmark, Download Manager, Digital Certificate Verification, Session Manager, Ad Blocking, and Pop-up Blocking. These feature is continue to grow up and develop since the user expectation also increase. All five browser in the research have the general features but each of them have their own differences and advantages. Mozilla Firefox viewed as the most advance feature by the users followed by the Google Chrome and Opera.

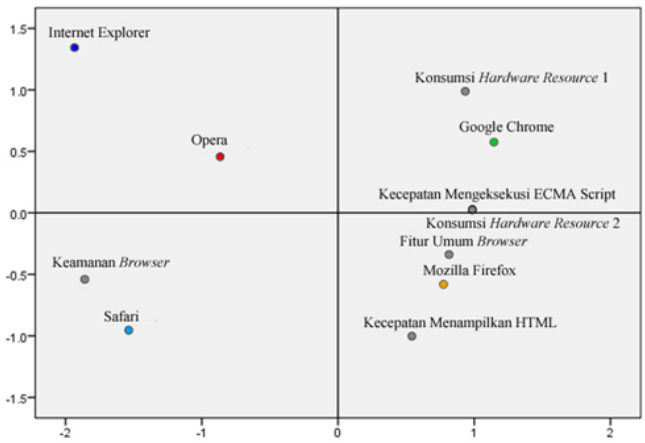

Figure 2: Position of Web Browser on Perceptual Map

Table 2 showed the overall browser performance according to the Indonesia Customer. It also tell us that Firefox is the best browser, followed by the Chrome, Internet Explorer, Opera, and Safari.

Table 2: Web Browser's Position Based On All Dimensions

Web Browser	Coord of Web Browser		Coord of Dimension FUB		*Euclidean Distance*			
	x	y	x	y	$(x_i - x_{i-1})^2$	$(y_i - y_{i-1})^2$	Ed	Rank
Firefox	0.0045	-0.5811	0.8145	-0.3385	0.6561	0.0589	0.8455	1
Chrome	1.1445	0.5750	0.8145	-0.3385	0.1089	0.8345	0.9713	2
IE	-1.9344	1.3437	0.8145	-0.3385	7.5565	2.8298	3.2228	5
Opera	-0.8654	0.4570	0.8145	-0.3385	2.8221	0.6328	1.8587	3
Safari	-1.5365	-0.954	0.8145	-0.3385	5.5272	0.3788	2.4302	4

5. CONCLUSION AND FURTHER RESEARCH

5.1 Conclusion

From the discussion it clearly visible that Mozilla Firefox is the best browser in the category of HTML speed display. For this dimension, Safari, Opera, and Internet Explorer still left behind. The Firefox only has close competition from Google Chrome. The second attribute, the speed of executing the ECMA Script, Google Chrome thriumph as the best browser in the category. While Opera, Safari, and Internet Explorer is left too far behind, the Mozilla Firefox become the closest competitor for the Google Chrome. On the third attribute, the browser security, the Apple's browser, Safari succeded to become the most trusted browser. The second place won by the Opera which beat Interent Explorer, Mozilla Firefox, and Google Chrome altogether. On the next attribute, the hardware consumption (KHR1), Safari once again win the contest followed by the Internet Explorer, then by the Opera, Mozilla Firefox, and Google Chrome. On the hardware resource consumption (KHR2), the Internet Explorer become the first choice of the Indonesia users. Safari took the second place, while Opera, Mozilla Firefox, and Google Chrome respectively follow. On the last attribute, the general feature, Mozilla Firefox regard as the best by the Indonesian users. The Chrome on the second place and followed by Opera, Safari, and Internet Explorer.

5.2 Further Research

Based on the result, it is difficult to choose which one of the five browser which can fulfill the user expectation. Each have their advantages and disadvantages. That's why we urge that the further research can be explore more about this. Further research also can be conducted based on the strategy from the developer when introducing their browser. This will help us to understand the positioning targeted by the company. The next research also can be conducted using new dimensions which then can help enhance the depth of the user perception analysis toward their preffered browser.

REFERENCES

Aggarwal, G., Burszten, E., Jackson, C., and Boneh, D. (2010). An Analysis of Private Browsing Modes in Moderns Browsers. *Journal Stanford University*. Vol 1(1). Retrieved from TechRepublic Stanford University.

Borg, I., and Groenen, P. J. F. (2005). *Modern Multidimensional Scalling*. Theory and Applications. Second Edition. Spinger.

Dobni, D., and Zinkhan, G.M. (1990). In search of brand image: a foundation analysis. *Advances in Consumer Research*. Vol. 17, pp. 110-19.

Edell, J.A., and Burke, M. C. (1987). The power of feelings in understanding advertising effects. *Journal of Consumer Research*, Vol. 14 No. 4, pp. 421-33.

Fishbein, M., and Ajzen, I. (1975). *Belief, Attitude, Intention and Behavior: An Introduction to Theory and Research*. Reading, MA: Addison - Wesley.

Fill, C. (1999). *Marketing communications, context, contents and strategies 2nd edition*. Hemel Hempstead, UK: Prentice-Hall.

Grosskurth, A., and Godfrey, M. (2011). A Reference Architecture for Web Browsers. *Computer Sciene*, Vol 1(1). Retrieved from University of Toronto.

Hair, Jr., J. F., Black, W. C., Babin, B. J., and Anderson, R. E. (2010). *Multivariate Data Analysis* (7th ed.). New Jersey: Pearson.

Hawkins, D., and Mothersbaugh, D. (2010). *Consumer Behavior: Building Marketing Strategy*. New York: McGraw-Hill Irwin.

Hawkins, D. C., Yen D., and Chou. (2000). Awareness and challenges of Internet security. *Information Management and Computer Security*, Vol. 8 Iss 3 pp. 131 – 143.

Hirschman, E. C., and Holbrook, M. B. (1982). Hedonic consumption: emerging concepts, methods and propositions. *Journal ofMarketing*. Vol. 46 No. 3, pp. 92-101.

Iwata, M., Arase, Y., Hara, T., and Nishio., S. (2010). Web browser for children using bubblemetaphor. *International Journal of Web Information Systems*. Vol. 6 Iss 1 pp. 55 – 73.

Keller, K. L. (2003). *Strategic Brand Management, 2nd ed.*, Prentice-Hall, Englewood Cliffs, NJ.

Kim, H. Y., and Kim, Y. K. (2008). Shopping enjoyment and store shopping modes: the moderating influence of chronic time pressure. *Journal of Retailing and Consumer Services*. Vol. 15 No. 5, pp. 410-9.

Kotler, P. (2003). *Marketing Management, 11th ed.*, Prentice-Hall, Englewood Cliffs, NJ.

Kotler, P., and Keller, K. L. (2012). *Marketing Management* (14th ed.). New Jersey: Pearson.

Laforet, S. (2010). *Managing Brands – A Contemporary Perspective*, McGraw-Hill, Maidenhead.

Lee, Gwo-Guang and Lin, Hsiu-Fen. (2005). Customer Perceptions of E-Service Quality in Online Shopping. *International Journal of Retail and Distribution Management*. Vol. 33(2), 161-176. Retrieved from Emerald Insight.

Lombart, C. (2004). Browsing behaviour in retail store: an opportunity for retailers. *European Retail Digest*. Vol. 43, pp. 58-64.

Malhotra, N. K. (2010). *Marketing Research An Applied Orientation* (6th ed.). New Jersey: Pearson.

Nsairi, Z. B. (2012). Managing browsing experience in retail stores through perceived value: implications for retailers. *International Journal of Retail and Distribution Management*. Vol. 40 Iss 9 pp. 676 - 698

Pentina, I., Amialchuk, A., and Taylor, D. G. (2011). Exploring effects of online shopping experiences on browser satisfaction and e-tail performance. *International Journal of Retail and Distribution Management*. Vol. 39 Iss 10 pp. 742 - 758

Peter, J. P., and Olson, J. C. (2008). *Understanding Consumer Behaviour*, Irwin, Boston, MA

Poturak and Goksu. (2012). Usage of the Multidimensional Scaling in Exploring a Firm's Image and Competitiveness. *Advanced Research in Scientific Areas*, 2012 December, 3-7.

Schiffman, L., and Kanuk, L. (2010). *Consumer Behavior* (9th ed.). New Jersey: Pearson.

Sekaran, U., and Bougie, R. (2010). *Research Methods for Business: a Skill Building Approach* (5th ed.). United Kingdom: John Wiley and Sons Ltd.

Shukla, D. and Singhai, R. (2011). Analysis of Users Web Browsing Behavior Using Markov chain Model. *Int. J. Advanced Networking and Applications.* Vol 2(5), 824-830. Retrieved from Cornell University Library.

Solomon, M., Bamossy, G., and Askegaard, S. (2002). *Consumer Behaviour: A Europien Perspective*. Prentice Hall.

Sopyani, G. R. (2012). Analisis Perbandingan Performansi and Pengembangan Pemilihan Web Browser. *Journal Universitas Siliwangi Tasikmalaya*. Vol 1(1). Retrieved from Universitas Siliwangi Tasikmalaya.

StatCounter. (2013). *Top 5 Browsers from Oct 2011 to Oct 2013*. [Online] http://gs. statcounter.com/#browser-ww-monthly-201110-201310-bar.

Sweeney, J. C., and Soutar, G. N. (2001). Consumer Perceived Value: The Development of A Multiple Item Scale. *Journal of Retailing*, 77, 203-20.

Worldstats. (2013). *World Internet Users and Population Stats*. [Online] http://www. internetworldstats.com/stats.htm.

Zikmund, W. G., Babin, B. J., Carr, J. C., and Griffin, M. (2010). *Business Research Methods* (8th ed.). Canada: South-Western, Cengage Learning.

JCGIRM Journal of Corporate Governance, Insurance, and Risk Management (JCGIRM)
2015, Volume 2, Series 3

Pages 91-116

Online Purchase Intention of Tablets (PC): Role of Social Media and Learning Style

Bidyanand Jha[a,*], **Dr.K.V.A.Balaji**[b]

[a] Kirloskar Institute of Advanced Management Studies, Gut No. 356, 357, Near Tata Foundry, Dhamane, Maval Taluka, Pune- 410506, Maharashtra, India

[b] Srijayachamarajendra College of Engineering, Campus Road, Mysore -570006, Karnataka, India

ABSTRACT

The present study attempts to investigate the relations between the communications on the social network platforms and its effect on the purchase intentions of the consumers and more specifically the young adolescents. Further, this study also attempts to investigate how these relationships vary across young people possessing different learning styles. This study analysed the data in three part. The initial was an exploratory study which consisted of maintaining and excluding those items which enabled the analysis of other dimensions or factors with a suitable degree of reliability or uni-dimensionality. The second part was an exploratory and confirmatory factor analysis and the third being the structural equation modelling, which discarded those items which did not enable suitable dimensionality for the entire construct in the model.

Confirmatory Factor Analysis (CFA) and Structural Equation Modelling (SEM) was used to test the present model using AMOS 21 software and basic calculations in statistics such as mean, standard deviation, factor analysis, correlation will be performed using SPSS 21. The study shows that the social media communication influence brand attitude and image leading to purchase intention.

ARTICLE INFO

Keywords:
Social Media Communication, User Generated Social Media Communication, Firm Generated Social Media Communication, Brand Attitude, Brand Image, Purchase Intention.

**Corresponding author:*
bj@kiams.ac.in
(Bidyanand Jha)

Article history:

Article Submitted 14-04-2015
Article Accepted 20-06-2015

**Article previously published in EJEM 2015, vol 2, No. 3

1. INTRODUCTION

Since the internet and other media have been adopted and integrated into the daily lives of an increasing number of young adolescents in most of the countries, scholars and commentators are debating the impact of these new media on the activities, social relationships, and worldviews of the younger generations. Controversies about whether technology shapes values, attitudes, and patterns of social behaviour are not new. In the recent past, the rapid expansion of television stimulated similar discussions of its cultural and social effects.

The websites of Social media provide an opportunity for companies to engage, actively involve and interact, network with the potential and current consumers, to encourage an increased sense of confidence of the customer relationship, and build all important meaningful relationships with consumers by winning their trust (Mersey, et al 2010) especially in today's business situation when consumer loyalty can be wiped out at the smallest mistake, which can additionally have online negative broadcast of their unfortunate experience with a particular product, service, brand or company.

The emergence of online social networks influences people in various ways and moreover, the effect is predicted to be high on the young adolescents wherein it is found that target group who is more exposed themselves to the online social media. It is believed that the social networks influence the purchase intentions and therefore it is important to study the potential impact online social networks may have in this field. The present study attempts to investigate the relations between the communications on the social network platforms and its effect on the purchase intentions of the consumers and more specifically the young adolescents. Further, this study also attempts to investigate how these relationships vary across young people possessing different learning styles.

2. Literature Review

2.1 Firm generated social media communication

In compare to traditional sources of firm-created communication, social media communications have been acknowledged as bulk phenomena with widespread demographic demand (Kaplan and Heinlein 2010). This acceptance of the implementation of social media communication among companies can be explained by the viral broadcasting of information via the Internet on social media websites (Li and Bernoff 2011) and the larger capacity to reach to the local public when matched with the traditional media (Keller 2009).

Brand always aim at presenting their company in a positive direction, communication through traditional media and firm-created social media communication – both fully organised by the marketer – will always lead to positive brand-based communication content and positive review. Thus, it is anticipated that a positive assessment of the traditional tools of marketing communications and firm-created communication will positively influence brand consciousness, awareness, functional, and to brand image.

2.2 User Generated Social Media Communication

User-generated content abbreviated as (ugc) is a speedily growing factor for brand conversations and consumer perceptions (Christodoulides et al, 2012). From the study conducted by the Anindya et al, (2012) the concept of User-generated content on social media platforms and product search engines is fluctuating the way customers buy for products online.

2.3 Brand Equity

The concept of brand equity is a strategic marketing strength (Styles and Ambler 1995) that can build a relationship that discriminates the links between a company and its costumer and that encourages long-term purchasing behaviour (Keller 2013). The study the understanding of brand equity and its development increases competitive obstacles and pushes brand prosperity (Yoo, Donthu, and Lee 2000). Although research and studies has been carried out extensively in the field of brand equity, the literature review on this topic is disjointed and inadequate (George Christodoulides and De Chernatony 2010).

The measurement of brand equity has been come up from two major viewpoints in the literature. Some studies has focused on the financial aspects of brand equity (Simon and Sullivan 1993), whereas other studies have highlighted the customer-based aspects (Aaker 1991; Keller 1993; Yoo and Donthu 2001). Thus, the main stream of study has been grounded in reasoning psychology, concentrating on memory arrangement (Aaker 1991; Keller 1993).

2.4 Brand attitude

Olson and Mitchell (1981) defines brand attitude is identified as a “purchaser’s overall assessment of a brand”. Brand attitude is normally conceptualized as a world-wide evaluation that is based on positive or negative reactions to brand-related motivations or philosophies (Murphy and Zajonc 1993) research work contribute to the fact that the central factor to be considered in consumer-based brand equity and interpersonal exchanges (Lane and Jacobson 1995; Morgan and Hunt 1994).

Brand attitude is included in the proposed conceptual framework in this study which aims to enhance the understanding of the effects of social media communication on consumer perceptions of brands.

2.5 Learning Style

Kolb (1984) developed the experiential learning model abbreviated as (ELM) is connected with the different learning style which takes the information processing method to learning. Fundamentally, the ELM is a four phase's cyclical process, where students who learn meritoriously will experience all four phases at different times in the learning procedure and can interchange backward and forward through the phases, depending on what is being taught and the technique used. However, the learner will generally have a predilection for one particular style and, as their learning progresses, which changes the preference of the learner to adopt different style (McCarthy2010).

It is proposed in the model below that User Generated and Firm Generated Communication will influence the Brand attitude and Brand equity. Further, brand equity and brand attitude affects the purchase decision of the consumer. The integrated model also suggests that the learning styles acts as the moderating variable.

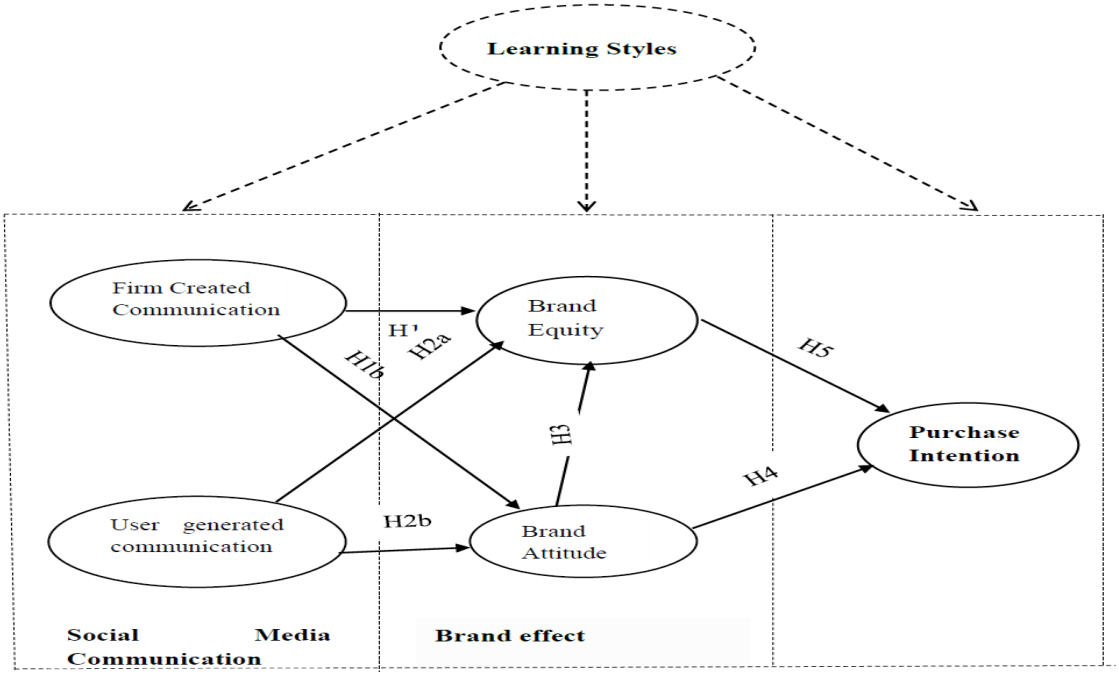

Fig 1 : **SMBM Model**

3. Development of Research Hypothesis

3.1 Social network Effects on brand equity

From the literature review supports the concept that branding communication influences brand equity by increasing the likelihood that a brand will be combined into a consumer's consideration set, thus assisting in the process of brand decision making and in the process of the choice becoming a habit (Yoo, Donthu, and Lee 2000). Nielsen (2009) study states that 70% of internet users believe the evaluations of consumers in the form of review on social media platforms.

In this study it was assume that a positive evaluation of firm created social media brand communication will positively influence brand equity. Thus, the following hypothesis formulated which states:

H1a. Firm-created social media communication positively influences brand equity.

From the effect of user-generated social media communication on brand equity, it must be standardised that UGC is not normally guided by marketing involvement or company control over the market (George Christodoulides and Jevons 2011). If the consumers review is positive content carry information about a product/brand or company that can be mostly useful for consumers in relations to consumer-based brand equity. Additionally, the effects of UGC on social media can lead to growth about the brand consciousness and brand associations, hence influencing the overall assessment of a brand. Consequently, leads to hypothesize as follows:

H2a. User-generated social media communication positively influences brand equity.

As per the effect of user-generated communication on serviceable and hedonic profits can be both positive and negative. In the situation of functional advantage, the impact of user-generated communication relates to content handling and mainly with the quality characteristics of the brand that can be arbitrated in both forms positively or negatively by consumers, thus prompting functional brand image either satisfactorily or disapprovingly. The same rational applies to the influence on a brand's hedonic advantage.

Nevertheless, brand attitude may also comprise of the affect that is not apprehended in measurable characteristics, even when a large set of features is involved. Researchers conducting study on Brand building multi-attribute models of customer inclination have incorporated a general constituent of brand attitude that is not clarified by the brand attribute standards (Srinivasan 1979). Supposing that positive brand assessments of consumers can reproduce perceptions of exclusiveness, which add to brand equity, leads to following stated hypothesis;

H3. Brand attitude positively influences brand equity.

3.2 Social Network Effects on brand attitude

It's expected that firm-created and user-generated social media communication to positively affect brand attitude. Because firm-created social media communication is proposed to be positive and to intensify brand awareness (Li and Bernoff 2011) and because positive user-generated social media communication, thus also intensify brand consciousness and brand associations (Burmann and Arnhold 2008), the following hypotheses is presented:

H1b. Firm-created social media communication positively influences the brand attitudes of consumers.

H2b. User-generated social media communication positively influences the brand attitudes of consumers.

3.3 Brand Attitude and Equity Effects on purchase intention

The study conducted by Farquhar (1989) opinions that there are three elements that are important in structuring a strong brand with the user: positive brand assessment, positive brand attitude, and a reliable brand image. From the research of De Chernatony et al. (2005, 2006) found that organizational culture and workers' values are likely to impact the group of values user perceive as constituting a service brand.

This indicates that positive attitudes are likely to endorse brand purchase, which is an outcome of brand equity. Faithful users tend to purchase more than moderately faithful or newly joined costumers (Yoo, Donthu, and Lee 2000). A positive attitude toward a brand impact a customer's decision making and purchase intention (Keller and Lehmann 2003). This also includes more positive costumer perceptions of the superiority of a brand are related with stronger purchase intentions and decision making (Aaker 1991). Thus, the following hypothesis:

H4. Brand attitude positively influences purchase intention.

H5. Brand equity positively influences purchase intention.

3.4 Learning Styles as the Moderating Variable Affecting the Social Media and Brand Communication Relationships

To purchase online is the decisions which are usually made by the user based on the information and display provided by electronic catalogues available for choice online or the communications that takes place on the social network platform through chats and reviews. There are few studies carried out

which emphasis on the impact of brand communication role in consumer learning on online shopping, the presentation, display of the products, designs and formats of these communications play an important role in preventing or enabling the decision –making to buy online (Li et al. 2003).

Social networks and websites can provide a high degree of interactivity, to satisfy consumers learning needs, and influence their purchasing decisions to buy product online. It is thus hypothesised that the learning styles influences the above listed hypothesis numbered H1 to H5.

4. RESEARCH METHODOLOGY

The instrument development involved structured interviews followed by a pilot study. Different statistical techniques were used to assess and validate the constructs selected for the study. Subjective content validity (based on structured interviews), Reliability tests (using Cronbach α) and confirmatory factor analysis (CFA) for evaluating the factor structure and initial validity were used for the investigation.

A two phased research methodology was adopted for this study. In the first phase, the definitions of the constructs as well as the measurement items for each construct were established. This phase provided tentative indications of reliability and validity.

The second part was an exploratory and confirmatory factor analysis and the third being the structural equation modelling, which discarded those items which did not enable suitable dimensionality for the entire construct in the model.

Confirmatory Factor Analysis (CFA) and Structural Equation Modelling (SEM) was used to test the present model using AMOS 21 software and basic calculations in statistics such as mean, standard deviation, factor analysis, correlation will be performed using SPSS 21.

The questionnaire items were based on the studies conducted earlier by Hong (2012), Schivinski and Dąbrowski (2013), Rehmani and Khan (2011), Kolb (1985) and modified based on the experts commands. The questionnaire had three parts, Part A, B and C. Part A captured the basic descriptive details from the respondents on the personal information, their social media preferences, usage and perceptions on the purchase made using the social media information.

Part B captured the information on the five main constructs for apparels used in the study model viz., company generated social media communication, user generated social media communication, brand attitude, brand equity and brand purchase intention. The last part, PART C was aimed to collect the

information pertaining to the learning styles of the respondents. It was based on the methodology proposed by Kolb (1985).

The sample size selected for the study was 301 students presently pursuing their business education from Mumbai and Bangalore. For each category, the respondent will be required to indicate a brand that he or she has "Liked" on social media from the selected three product categories. It was assumed that consumers have been exposed to social media communication from both companies and users from brands that they have "Liked" on any social media platform. The product categories and wide array of brands also reflect an extensive set of consumer products and should provide research generalizability.

As a requisite for the study, the respondents were required to receive news feeds both from the company and from other users with respect to the brand that they had previously "Liked" on the social network site and have developed a purchase intention. Each respondent was required to complete one version of the questionnaire evaluating only one brand. He had to fill different questionnaire for different brands.

As sample size depends on statistical tool as structural equation modelling (SEM) is used in this study. Sample size is decided based on two conditions: (N > p), where N is number of sample and p is observed variables (Schermelleh-Engel, and Moosbrugger, 2003); and with three more indicator per factor sample of 301 is sufficient for convergence and proper solution (Lacobucci, 2010). Hence total sample size of 301 respondents are considered, as number of observed variable for product category is 18 and makes a total of 54 variables for model testing.

The selected respondents represented 65% Male students and the other 35% female students. 21.5% percent of the respondents belonged to the commerce stream, 15.2% from Science, 27.9 % from Management and 24% from Engineering background. In terms of the present interaction with reference to the time spent on the social networking sites. Care was taken to have a representative distribution of the sample respondents. No respondent was selected for the study who doesn't spend any time on these networks. Almost 65% of the selected respondents spent more than 7 hours per week on the social media sites.

RESEARCH FINDING

5.1 MODEL VALIDATION FOR THE TABLET PC'S

The model with five critical variables Firm Created Communication (TPC_FCC), User Generated Social Media Communication (TPC_UGSMC), Overall Brand Equity (TPC_OBE), Brand Attitude (TPC_BA) and Brand Purchase Intention (TPC_BPI) identified from the literature had content validity because an extensive review of the literature was conducted in selecting the items.

The respondents were asked to give their responses keeping in mind a representative brand for the tablet PC so that the model validations can be carried out. The breakup of brands selected under the tablet PC product category is shown in figure below.

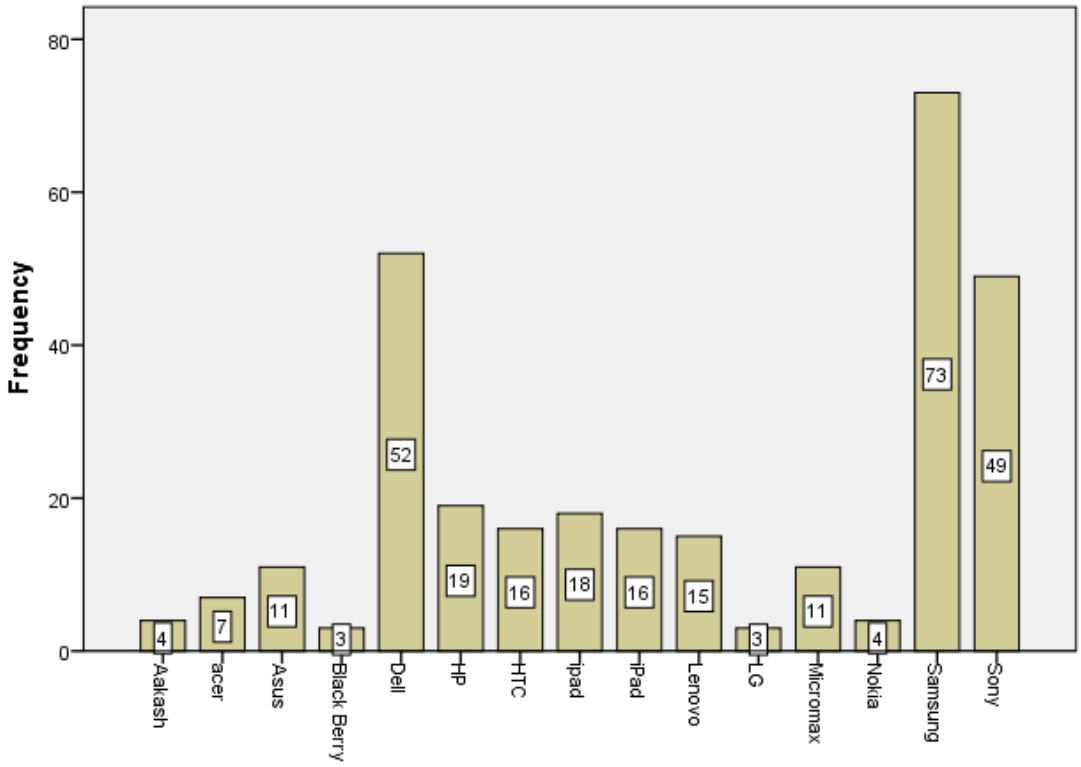

Figure 2 : Brand Details for the Tablet PC Product Category

5.2 Reliability Measures for Tablet PC

The reliability values for all constructs are all greater than .80, it was found that brand purchase intention got highest value of 0.895 which are considered acceptable (Nunnally, 1978). Table presents the statistical descriptive measures like mean, standard deviation and range of item correlations for the constructs selected in the study. From the ranges of item to item correlation (R^2) it was interpreted that the items show high positive correlation with the each other. From the Table the ranges of item to item correlation (R^2) it was interpreted that the items show high positive correlation with the each other, with a significant level of 0.05. The factors which have scored high value of correlation have

shown considerable positive range of correlation amongst themselves. The percentage of variance is a popular and intuitive index of goodness of fit in multivariate data analysis the higher the percentage of variance a proposed model manages to explain, the more valid the model seems to be from the above table all the constructs are showing higher percentage of variance ranging between 72 to 82%.

Table 1 : Descriptive Statistics and Reliability Analysis for Tablet PC

Constructs (For Tablet PC)	**Initial Items**	**Item Dropped based on Experts Opinion**	**Mean Value (N=301)**	**S.D.**	**Range of Item to Item Correlation**	**Cronbach's Alpha (α) Score**	**% of Variance**
Firm Created Communication (TPC_FCC)	4	-	3.4203	1.08389	.507** - .714**	0.879	73.777
User Generated Social Media Communication (TPC_UGSMC)	4	-	3.4726	1.02305	.582** - .697**	0.874	72.759
Overall Brand Equity(TPC_OBE)	4	-	3.5889	1.13659	.554** - .753**	0.885	74.689
Brand Attitude(TPC_BA)	3	-	3.6213	1.16823	.612** - .781**	0.860	78.245
Brand Purchase Intention (TPC_BPI)	3	-	3.5072	1.28593	.720** - .772**	0.895	82.622
Total items	**18**	**0**					
****Correlation is significant at 0.01 level (2-tailed). *Correlation is significant at 0.05 level (2-tailed).**							

5.3 SMBM Model for Tablet PC Brands

Structural Equation Modelling (SEM) was used to test the relationship between the five constructs at α = 0.05, Firm Created Communication (TPC_FCC), User Generated Social Media Communication (TPC_UGSMC), Overall Brand Equity (TPC_OBE), Brand Attitude (TPC_BA) and Brand Purchase Intention (TPC_BPI)

Table below presents the regression weights for the various relationships. The relationships were found to be highly significant across all the selected constructs. It is found that the model fit is satisfactory. The model is accepted as good model with CFI = 0.802, GFI = 0.862, NFI = 0.881, RMR = 0.028, Cmin/Df = 5.141.

These relationships are depicted in graphical form as given by the AMOS output in the following figure.

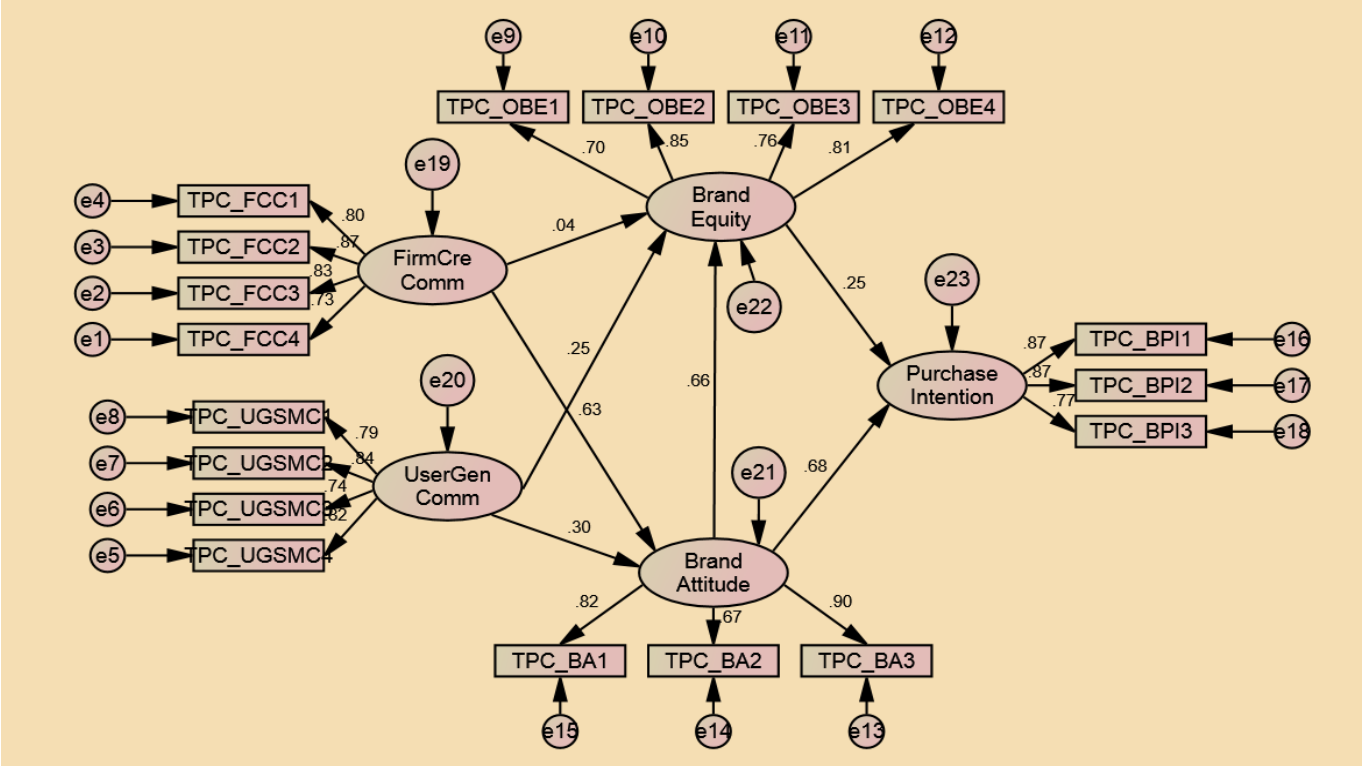

Fig 3: AMOS Output , Regression weight of various variables.

It is found that the model fit is satisfactory though the cut off values are relatively low based on meeting the above standards used by the researchers for SEM, still the model is accepted as good model with CFI = 0.802, GFI = 0.862, NFI = 0.881, RMR = 0.028, Cmin/Df = 5.141. The significant

relationships between the various constructs and the items used for defining the constructs can be found from the table given below.

Table 2:Performance fit Indices for Tablet PC Brands

CMIN/ DF	5.141
RMR	0.028
CFI	0.802
NFI	0.881
GFI	0.862
Acronyms: CMIN/ DF: Relative chi-square. RMR: Root Mean Square Residual. GFI: Goodness of Fit Index CFI: Comparative Fit Index NFI: Normed Fit Index. James Mulaik & Brett (1982) parsimony adjustment to NFI.	

5.4 Learning Styles as the moderating variable on the Relationship between the social media communication, brand effects and purchase intentions

The findings of the first phase revealed that majority of the respondents (almost 50% of them) followed the concrete learning style followed by reflective learning style and active learning styles. Surprisingly none of the student were identified to fall in the category of Abstract learning styles. This shows that the MBA students, when interacting on the social networking are highly action oriented and believe in either experiencing, reflecting or doing, then thinking.

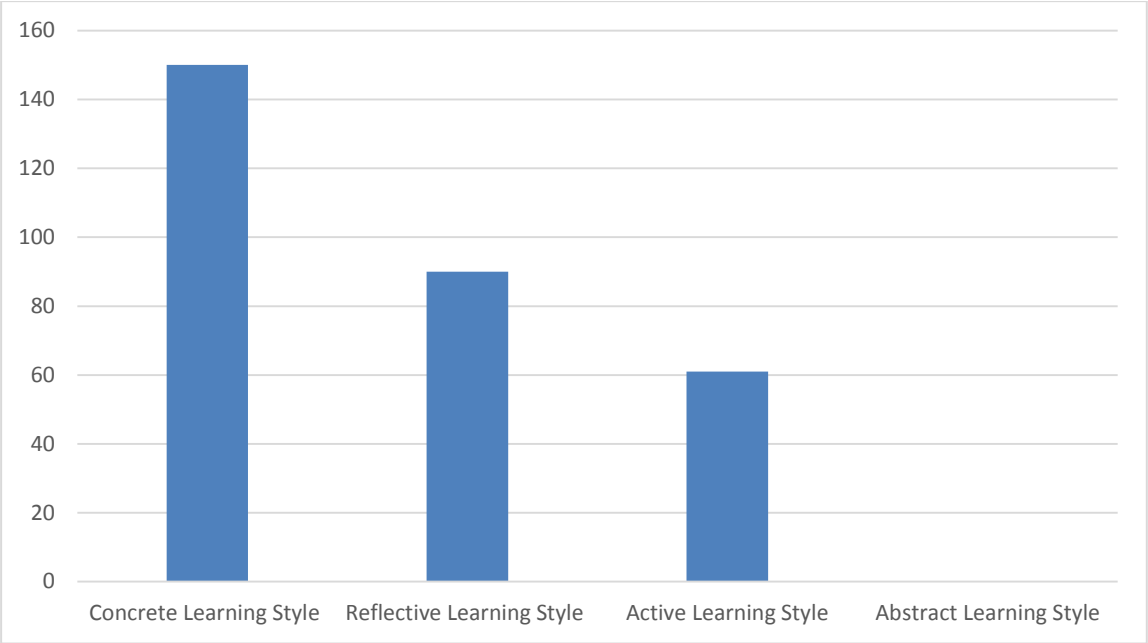

Figure 4: Profile of Learning Styles Identified in the Study

5.5.LEARNING STYLE AS THE MODERATING VARIABLE ON THE SMBM MODEL-TABLET PC BRANDS

Structural Equation Modeling was used to test the effect of learning styles on the SMBM model. The model was run for the three groups identified in our study namely. Concrete Learning Style, Reflective Learning Styles and Active Learning Style. The regression weights estimated for the three groups are shown in Table a, b and c. the significant tested model with modifications are presented in figure a, b and c.

Table 3: Regression Weights Concrete Learning Style- Tablet PC Brands

Constructs			**Estimate**	**S.E.**	**C.R.**	**P**
Brand_Attitude	<---	FirmCre_Comm	.794	.110	7.186	***
Brand_Attitude	<---	UserGen_Comm	.333	.086	3.893	***
Brand_Equity	<---	FirmCre_Comm	.335	.082	4.085	***
Brand_Equity	<---	UserGen_Comm	.220	.062	3.547	***
Brand_Equity	<---	Brand_Attitude	.447	.083	5.413	***
Purchase_Intention	<---	Brand_Equity	.561	.161	3.484	0.05
Purchase_Intention	<---	Brand_Attitude	.739	.114	6.500	***
TPC_FCC4	<---	FirmCre_Comm	1.000			
TPC_FCC3	<---	FirmCre_Comm	1.117	.115	9.695	***

TPC_FCC2	<---	FirmCre_Comm	1.103	.109	10.092	***
TPC_FCC1	<---	FirmCre_Comm	1.150	.123	9.325	***
TPC_UGSMC4	<---	UserGen_Comm	1.000			
TPC_UGSMC3	<---	UserGen_Comm	.898	.095	9.469	***
TPC_UGSMC2	<---	UserGen_Comm	1.039	.090	11.479	***
TPC_UGSMC1	<---	UserGen_Comm	.853	.081	10.484	***
TPC_OBE2	<---	Brand_Equity	1.318	.145	9.082	***
TPC_OBE3	<---	Brand_Equity	1.203	.145	8.317	***
TPC_BA3	<---	Brand_Attitude	1.000			
TPC_BA2	<---	Brand_Attitude	.753	.078	9.633	***
TPC_BA1	<---	Brand_Attitude	.879	.069	12.795	***
TPC_BPI1	<---	Purchase_Intention	1.000			
TPC_BPI2	<---	Purchase_Intention	.991	.074	13.357	***
TPC_BPI3	<---	Purchase_Intention	.873	.080	10.848	***
TPC_OBE1	<---	Brand_Equity	1.000			
TPC_OBE4	<---	Brand_Equity	1.406	.161	8.760	***

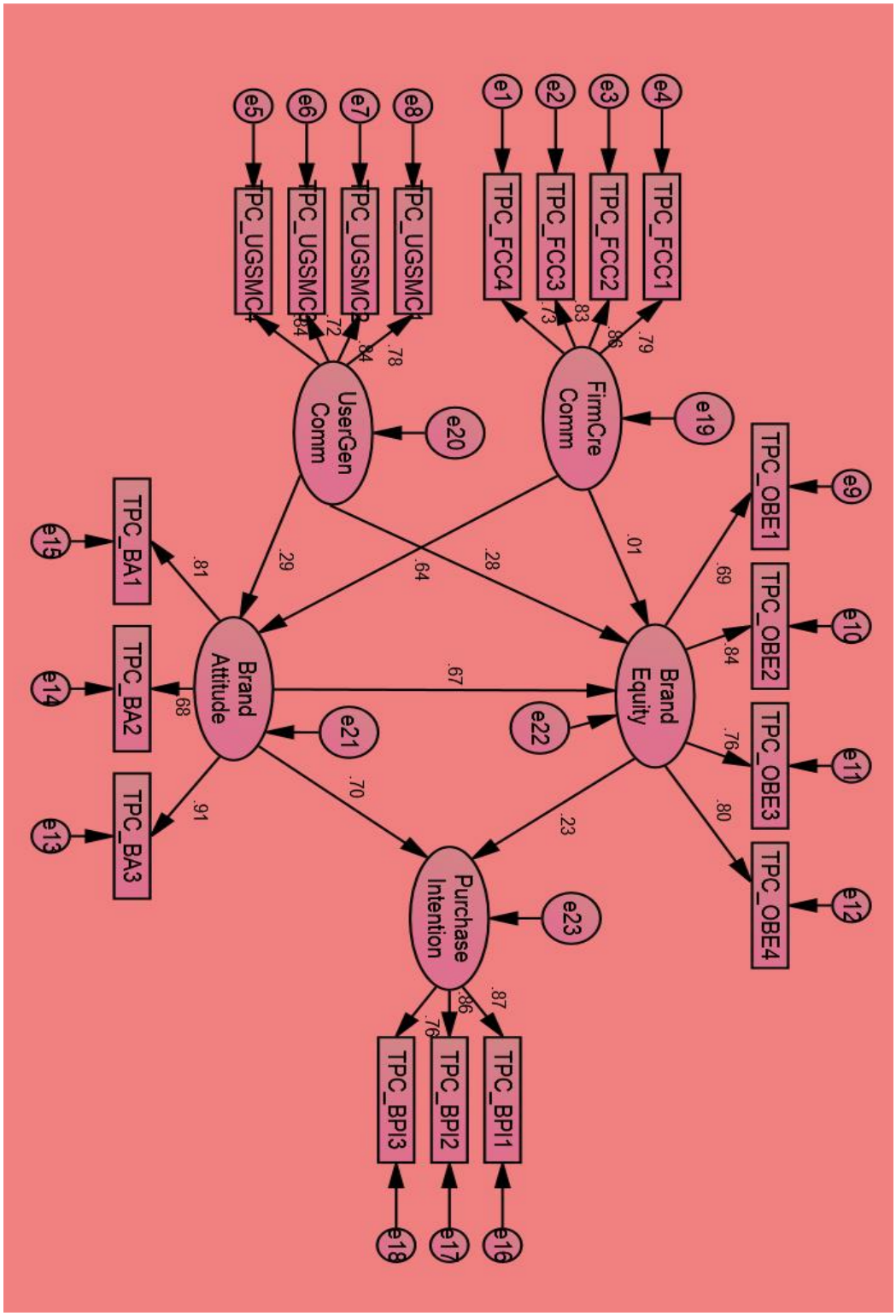

Figure 5: Structural Equation Model (Concrete Learning Style) for Tablet PC Brands

Table 4: Performance fit Indices (Concrete Learning Style) for Tablet PC Brands

CMIN/ DF	4.209
RMR	0.028
CFI	0.814
NFI	0.772
GFI	0.758
Acronyms: CMIN/ DF: Relative chi-square. RMR: Root Mean Square Residual. GFI: Goodness of Fit Index CFI: Comparative Fit Index NFI: Normed Fit Index. James Mulaik & Brett (1982) parsimony adjustment to NFI.	

Table 5: Regression Weights (Reflective Learning Style) for Tablet PC Brands

Constructs			**Estimate**	**S.E.**	**C.R.**	**P**
Brand_Attitude	<---	FirmCre_Comm	.805	.144	5.579	***
Brand_Attitude	<---	UserGen_Comm	.333	.109	3.054	.002
Brand_Equity	<---	FirmCre_Comm	.452	.119	3.798	***
Brand_Equity	<---	UserGen_Comm	.418	.085	4.917	***
Brand_Equity	<---	Brand_Attitude	.425	.116	3.682	***
Purchase_Intention	<---	Brand_Equity	.385	.108	3.564	***
Purchase_Intention	<---	Brand_Attitude	.718	.154	4.677	***
TPC_FCC4	<---	FirmCre_Comm	1.000			
TPC_FCC3	<---	FirmCre_Comm	1.108	.150	7.375	***
TPC_FCC2	<---	FirmCre_Comm	1.088	.140	7.746	***
TPC_FCC1	<---	FirmCre_Comm	1.159	.161	7.190	***
TPC_UGSMC4	<---	UserGen_Comm	1.000			
TPC_UGSMC3	<---	UserGen_Comm	.868	.124	6.983	***
TPC_UGSMC2	<---	UserGen_Comm	1.033	.124	8.356	***
TPC_UGSMC1	<---	UserGen_Comm	.873	.111	7.869	***
TPC_OBE2	<---	Brand_Equity	1.320	.181	7.300	***
TPC_OBE3	<---	Brand_Equity	1.194	.179	6.657	***
TPC_BA3	<---	Brand_Attitude	1.000			

TPC_BA2	<---	Brand_Attitude	.764	.109	7.001	***
TPC_BA1	<---	Brand_Attitude	.913	.097	9.454	***
TPC_BPI1	<---	Purchase_Intention	1.000			
TPC_BPI2	<---	Purchase_Intention	.985	.098	10.057	***
TPC_BPI3	<---	Purchase_Intention	.903	.103	8.775	***
TPC_OBE1	<---	Brand_Equity	1.000			
TPC_OBE4	<---	Brand_Equity	1.326	.194	6.840	***

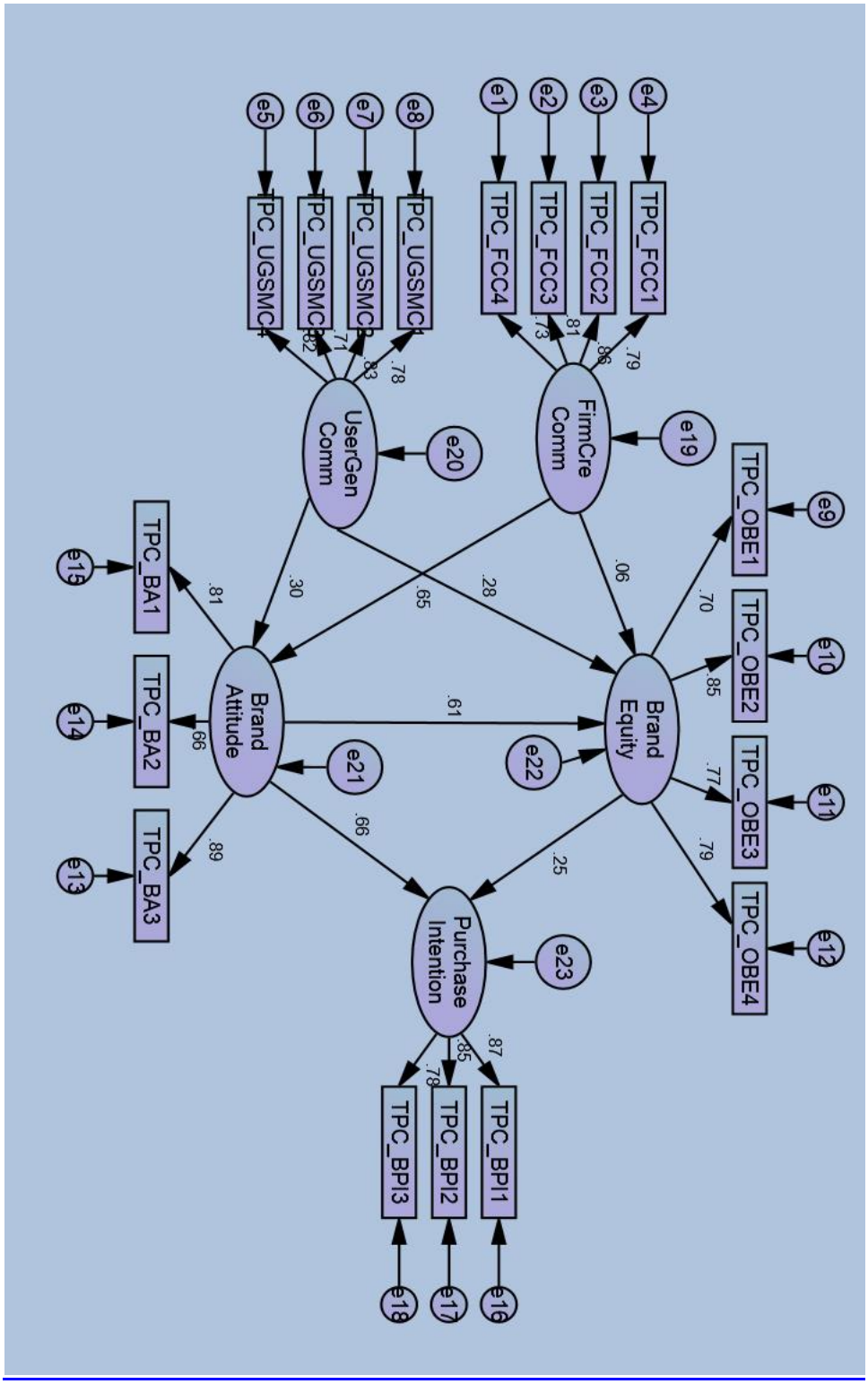

Figure Pogreška! U dokumentu nema teksta navedenog stila.**: Structural Equation Model (Reflective Learning Style) for Tablet PC Brands**

Table 6: Model Summary (Reflective Learning Style) for Tablet PC Brands

CMIN/ DF	2.576
RMR	0.026
CFI	0.837
NFI	0.763
GFI	0.748

Acronyms:

CMIN/ DF: Relative chi-square. RMR: Root Mean Square Residual. GFI: Goodness of Fit Index CFI: Comparative Fit Index

NFI: Normed Fit Index. James Mulaik & Brett (1982) parsimony adjustment to NFI.

Table 7: Regression Weights (Active Learning Style) for Tablet PC Brands

Constructs			Estimate	S.E.	C.R.	P
Brand_Attitude	<---	FirmCre_Comm	.716	.183	3.920	***
Brand_Attitude	<---	UserGen_Comm	.471	.163	2.888	.004
Brand_Equity	<---	FirmCre_Comm	.590	.126	4.682	***
Brand_Equity	<---	UserGen_Comm	.432	.114	3.789	***
Brand_Equity	<---	Brand_Attitude	.513	.123	4.170	***
Purchase_Intention	<---	Brand_Equity	.555	.120	4.625	***
Purchase_Intention	<---	Brand_Attitude	.710	.173	4.098	***
TPC_FCC4	<---	FirmCre_Comm	1.000			
TPC_FCC3	<---	FirmCre_Comm	1.250	.199	6.297	***
TPC_FCC2	<---	FirmCre_Comm	1.199	.182	6.578	***
TPC_FCC1	<---	FirmCre_Comm	1.259	.209	6.033	***
TPC_UGSMC4	<---	UserGen_Comm	1.000			
TPC_UGSMC3	<---	UserGen_Comm	1.179	.171	6.888	***
TPC_UGSMC2	<---	UserGen_Comm	1.104	.150	7.350	***
TPC_UGSMC1	<---	UserGen_Comm	1.042	.150	6.941	***
TPC_OBE2	<---	Brand_Equity	1.176	.178	6.601	***
TPC_OBE3	<---	Brand_Equity	1.045	.176	5.925	***
TPC_BA3	<---	Brand_Attitude	1.000			
TPC_BA2	<---	Brand_Attitude	.670	.114	5.903	***
TPC_BA1	<---	Brand_Attitude	.852	.094	9.025	***
TPC_BPI1	<---	Purchase_Intention	1.000			
TPC_BPI2	<---	Purchase_Intention	.981	.109	9.019	***
TPC_BPI3	<---	Purchase_Intention	.886	.119	7.447	***
TPC_OBE1	<---	Brand_Equity	1.000			
TPC_OBE4	<---	Brand_Equity	1.341	.199	6.728	***

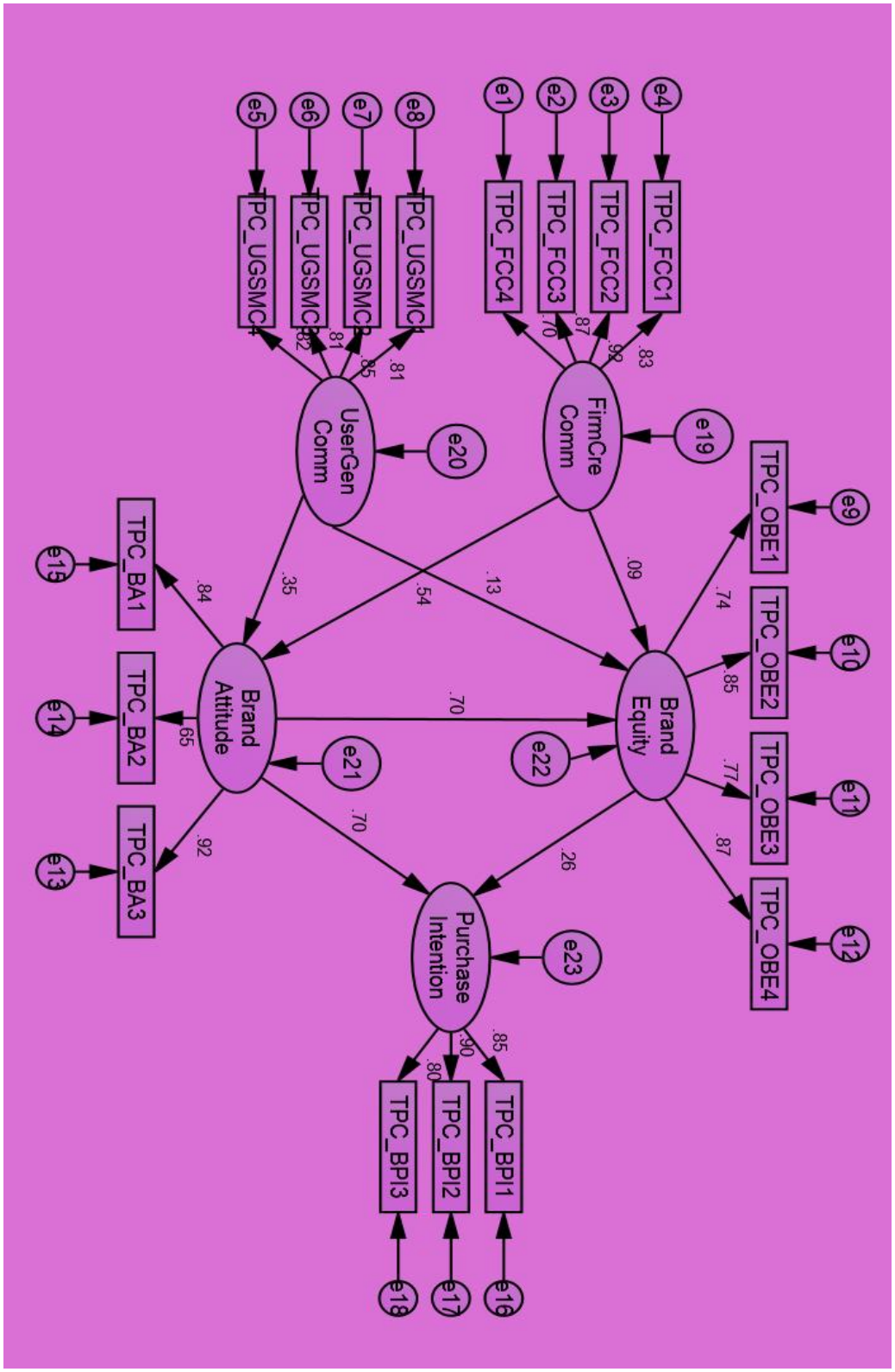

Figure 7: Structural Equation Model (Active Learning Style) for Tablet PC Brands

Table 8 :Model Summary (Reflective Learning Style) for Tablet PC Brands

CMIN/ DF	2.081
RMR	0.031
CFI	0.854
NFI	0.757
GFI	0.718
Acronyms: CMIN/ DF: Relative chi-square. RMR: Root Mean Square Residual. GFI: Goodness of Fit Index CFI: Comparative Fit Index NFI: Normed Fit Index. James Mulaik & Brett (1982) parsimony adjustment to NFI.	

6. Major Findings for Tablet PC Brands

The following observations are made from the findings presented in the above tables:

- Concrete Learning Style

  All the relationships were found to be statistically significant with the Firm Generated Communication having the maximum effect (0.794) on the brand attitude compared to the effect of the User generated Communication on the brand image.

- Reflective Learning Style

  Surprisingly in this case also it was found that the All the relationships were found to be statistically significant with the Firm Generated Communication having the maximum effect (0.805) on the brand attitude compared to the effect of the User generated Communication on the brand image.

- Active Learning Style

  In this group also the Firm generated communication helped to have a very strong influence (0.716) on the brand attitude as compared to the influence of the User Generated communication directly on the brand equity.

Overall we can say that the Firm generated information plays a very important role in developing a brand attitude leading to brand equity and purchase intentions irrespective of the learning styles adopted by the person.

7. Discussion &Managerial Implications

The result reported in this paper contribute to the literature on the influence of firm created social media communication & user generated social media communication on brand attitude which in turn influence brand equity and subsequently purchase intention by making explicit the mediating/moderating role of learning style on the antecedents of brand attitude. Thus the following suggestions can be extracted for the practitioners.

Companies should engage with multiple blogs, forums and wikis covering issues relating to their product or brand. There has to be frequent comment and should try to create a dialogue with the social media users. This will help to form a chain reaction on the internet and may lead viewers of other blog back to your blog or the media company is using. It is required that the marketers should have the detailed twitter profile included on the company URL. Company should strive to tweet minimum twice a day and aim to increase the follow up with the online viewers. It is also recommended to have a YouTube channel which points to the blog and twitter and should sponsor or develop webcasts to help the college students with any areas they are struggling with related to the product or brand. Videos should be uploaded regularly.

Companies don't necessarily need to engage with the people who have the largest number of apparent connections. These people might not necessarily have the greatest number of strong relationship amongst their connections. Monitoring their blogs, status updates and forum entries will give a good idea of how they interact within their social circle.

Company also needs to consider their people inside the organization. They need to identify evangelists, enthusiasts, pragmatists and any detractors inside the organization. These are the people who might have already be speaking publically about the brand. Make sure that they are prepared to communicate externally with an effective, practical and workable social media policy.

8. CONCLUSION , LIMITATIONS AND DIRECTIONS FOR FUTURE RESEARCH

The rapid rise of social media may be the most important evolution to impact marketing in decades. It has changed almost everything. It enables businesses to influence new buyers (rather than sell to them), interact and engage with customers (instead of having a one-way dialogue), and it puts the consumer in control of shaping and influencing a brand (not marketers).

Around the world. Social networks, blogs, media aggregators, and dozens of different types of digital media provide channels for consumers to have their voices heard. This has changed the entire landscape of marketing, and the bottom line is that power has shifted to consumers who now have the ability to interact and influence brands. Consumers can influence how fast a new product is adopted and liked, and they can bring a company to its knees when they set out to damage a brand. When videos like the "Comcast sleeping technician" are posted and shared, it's easy to see how the power of one consumer-generated video can affect a brand.

Consumer-generated media is everywhere. YouTube gives users power and control to upload, download, post, and share videos to inform, persuade, educate, and entertain others. Media sites like Digg and Stumblupon give consumers the power to review and vote on content they believe is the most important or interesting. On sites like Wikipedia, content is completely created by a community of users. What drives the popularity of consumer-generated media? At the most basic level is the emotional need to be heard. People that feel "wronged" want to be heard as much as they want to evangelize what they love. The Internet and social media is so accessible and easy to use, it provides a platform for those that want to connect, communicate, and drive change.

- Because of time limitation and to keep the model at a manageable size, this research did not consider the factors inhibiting the use of social media on the teens and youngsters like age restrictions, restrictions by the parents to use social media etc. future studies may address these issues.

- Future study may develop additional measurement constructs in the model such as demographic profiles of the users or the effect of technology adoption like perceived usefulness or ease of use components of the social media. Even it would be interesting to evaluate the effect of peer pressure in using the social media and its effect on the purchase decisions.

- It would also be interesting to carry out the research both in developing countries and developed countries and study the implications for social media on the brand managers in these economies, specific to the product categories selected in this study.

- The social media landscape and practices are changing with the competitive environment as discussed in the previous section and hence with changing times it is required to get the selected practices and the measures validated from the practitioners.

REFERENCES

Aaker, D. (1996). Measuring brand equity across products and markets. California Management Review, 38(3), 102–119.

Aaker, D.A. 1991. Managing Brand Equity: Capitalizing on the Value of a Brand Name. New York, New York, USA: The Free Press.

Aaker, D.A., and K.L. Keller. 1990. Consumer Evaluations of Brand Extensions. Journal of Marketing54, no. 1: 27–41.

Christodoulides, G. 2009. Branding in the Post-internet Era. Marketing Theory 9, no. 1 (March 1):141–144.

Daugherty, T., M. Eastin, and L. Bright. 2008. Exploring Consumer Motivations for Creating Usergenerated Content. Journal of Interactive Advertising 8, no. 2: 1–24.

Bambauer-Sachse, S., and S. Mangold. 2011. Brand Equity Dilution through Negative Online Wordof-mouth Communication. Journal of Retailing and Consumer Services 18, no. 1 (January): 38–45.

Chang H H and Liu Y M (2009), "The Impact of Brand Equity on Brand Preference and Purchase Intentions in the Service Industries", The Service Industries Journal, Vol. 29, No. 12, pp. 1687-1706.

Christodoulides, George, C. Jevons, and J. Bonhomme. 2012. Memo to Marketers: Quantitative Evidence for Change. How User-Generated Content Really Affects Brands. Journal of Advertising Research 52, no. 1: 53.

Cuming, L., 2008. Engaging Consumers Online: The Impact of Social Media on Shopping Behaviour Through Internet: the Malaysian Case. Australian Journal of Basic and Applied Sciences, 3(4), pp. 3452-3463.

Diffley, S., Kearns, J., Bennett, W., & Kawalek, P. (2011). Consumer behaviour in social networking sites: implications for marketers. Irish Journal Of Management, 30(2), 47-65.

Farquhar P H (1989), "Managing Brand Equity", Marketing Research, Vol. 1, No. 3, pp. 24-33.

Fauser, S.G. Wiedenhofer, J. and Lorenz, M., 2011. "Touchpoint social web": an explorative study about using the social web for influencing high involvement purchase decisions. Problems and Perspectives in Management, 9(1), pp.39-45.

Hong Hu (2012), The effects of online shopping attributes on satisfaction–purchase intention link: a longitudinal study International Journal of Consumer Studies 36 (2012) 327–334 © 2011 Blackwell Publishing Ltd.

Kaplan AM, & Heanlein M, (2010). Users of the world unite: The challenges and opportunities of social media. Business Horizons, Vol. 53, P 59-68.

Keller, E., & Libai, B. (2009). A Holistic Approach to the Measurement of WOM. Paper presented at ESOMAR Worldwide Media Measurement Conference, May 4-6, in Stockholm.

Keller, K.L. 1993. Conceptualizing, Measuring, and Managing Customer-Based Brand Equity. Journal of Marketing 57, no. January: 1–22.

Kolb, D. A. 1985. Learning Style Inventory. TRG hay/McBer, Training Resoruces Group. 116 Huntington Avenue, Boston, MA 02116. Retrieved from trg_mcber@ haygroup.com.

Li, C., and J. Bernoff. 2011. Groundswell: Winning in a World Transformed by Social Technologies. Boston M.A.: Harvard Business Review Press.

McCarthy, M. (2010). Experiential learning theory: From theory to practice. Journal of Business & Economics Research, 8(5), 131–139.

Mersey, R. D., Malthouse, E. C., & Calder, B. J. (2010). Engagement with Online Media. Journal of Media Business Studies, 7(2), 39-56.

Murphy, S.T., and R.B. Zajonc. 1993. Affect, Cognition, and Awareness: Affective Priming with Optimal and Suboptimal Stimulus Exposures. Journal of Personality and Social Psychology 64, no. 5 (May): 723–39.

Rehmani, M and Khan, M (2011), The Impact of E-Media on Customer Purchase Intention, International Journal of Advanced Computer Science and Applications, Vol. 2, No.3,

Rehmani. M and Khan. M. 2011. The Impact of E-Media on Customer Purchase Intention. International Journal of Advanced Computer Science and Applications, Vol. 2, No.3, March 2011.

Srinivasan, V. 1979. Network Models for Estimating Brand-specific Effects in Multi-attribute Marketing Models. Management Science 25, no. 1: 11–21.

Styles, C., and T. Ambler. 1995. Brand Management. Pitman, London: Financial times handbook of management.

JCGIRM Journal of Corporate Governance, Insurance, and Risk Management (JCGIRM)
2015, Volume 2, Series 3

Pages 117-130

Good work ethics and service delivery in public universities in the south-south region of Nigeria

[1] Ushie, E. M. (Ph.D). [2]Agba, A. M. Ogaboh (Ph.D)
[1 & 2] Lecturers, Department of Sociology, Faculty of Social Sciences, University of Calabar, Calabar. Nigeria. *E-mail: mondayushies@yahoo.com*.

ABSTRACT

The Nigerian University administration is a collection of specialized academic faculties established by law, financed by private and public funds, and staffed by professionals in various disciplines for the purpose of achieving their overall goal (teaching, research, and community service) of service delivery. Since good work ethics represents a critical determinant of effectiveness and productivity vis-à-vis service delivery in all formal organizations, this paper utilizes the "person-situation" theoretical model to assess the level of service delivery in selected public universities in the South-south geo-political region of Nigeria. The present investigation adopted the survey research design. Six hundred and sixty (660) academic and non-academic staff and three hundred (300) students were purposively and randomly sampled respectively. The instrument used for data collection was titled: "good work ethics and service delivery questionnaire". Data was analyzed using population t-test, multiple regression and Pearson product moment correlation. The study revealed that almost all the public universities under consideration have witnessed poor service delivery in terms of delay in the release of students' results, delay in the preparation of transcript, failure to adhere to time-tables (crash programme) – leading to frustration by students. The overall consequences of this have been the poor rating of these universities. It was recommended among other things that effort should be made to address the poor work ethics (in terms of initiative, dedication, high standard of responsibility, loyalty, accountability, and self-discipline) among staff and students in the selected universities with a view to strengthening its performance index and therefore service delivery.

ARTICLE INFO

Keywords:
Work ethics, Services delivery, South-South, public universities, Nigeria.

Corresponding author:
E-mail:
mondayushies@yahoo.com
Ushie, Ekwuore Monday
Department of Sociology,
Faculty of Social Sciences,
University of Calabar,
Calabar, Nigeria.
Phone: +2348023612599

Article history:

Article Submitted 14-04-2015
Article Accepted 20-06-2015

**Article previously published in EJEM 2015, vol 2, No. 3

1 INTRODUCTION

Work, whether paid or unpaid connotes the carrying out of tasks requiring the expenditure of mental and physical effort, which has as its objectives the production of goods and services that cater to human needs (Gidens, 2009). However, how a given employee perceive the above conception depends on his/her orientation to work. That is, the aspirations and goals which workers hope to fulfill in their place of work. These aspirations and goals are assured to have evolved from needs created by situational factors within the work and non work spheres of life (Aluko, 2008). Experience have shown that attitude to work which moderate such situational variables is critical in determining the effectiveness or otherwise of an organization. Okoh (2003) see attitude as the feeling, habits and beliefs that affect the individuals' behaviour to work. Some beliefs, habits, feelings and motives are supportive of positive work ethics while others do not.

The work attitude affects the way a worker relates to, conceives and views his job. It shows how committed, dedicated, hard working and performing a worker is in relation to the objective of the organization. Implying from the above therefore, workers imbued with positive work ethics world be seen to be highly committed, dedicated and hardworking leading to the achievement of the vision and mission of their respective organization. The reverse could also be the case.

In more general terms, work ethics involve being personally accountable and responsible for the work that one does or how one feel about the job he/she does. If one may ask, with particular reference to the Nigeria public universities, are the workers accountable and responsible for the work that they do? How do they generally feel about their work? Have they been able to live up their expectations in terms of satisfying the vision and mission of their institution vis-à-vis service delivery? Questions such as these should provoke our imagination and begging for answers.

The university administration (especially public universities) have made headlines in recent times of its inability to render specific services to its immediate beneficiaries. Like Alubo (2014) puts it, "Nigeria's Tertiary Educational Institutions (TEIs) have hugged the headlines at most continuously for the past two years, albeit for the wrong reasons". According to him, rather than any earthshaking piece of research or cutting edge discovery,

the reportage is replete with clashes between rival cults groups, campus prostitution…. There are also issues of admission racketeering, sometimes complete with business offices, and sorting as the trading in grades between lecturers and students is known (Alubo, 2014). These activities (Alubo, 2014) concluded put TEIs in bad light not just because of the malfeasance which they represent but more because their presence raises basic questions about the raison d'être of the TEIs.

What could definitely explain this bizarre situation in our public university system? Could it be that the workers in these institutions do not perceive work in a positive light or do not seen to derive self worth from their work? This paper therefore seeks to espouse the implication of this supposedly poor work ethics among university workers on their ability to achieve the tripartite mandate of teaching, research and community service. Most specifically, it is also intended to find out whether such perceived poor work ethics have any impact on the workers ability to render prescribed service to their major stakeholder (students) in term of prompt release of results/transcripts. Also the study seeks to evaluate the extent to which the Nigerian Public Universities adhere to official time table in terms of teaching and administration of examination. Finally, to find out if there exists a relationship between workers poor work ethics and the overall rating of Nigerian Public Universities.

1.1 Study area

The data reported here were obtained from a field survey on staff and students perception of work ethics and service delivery in Nigerian Public Universities. The survey was carried out in selected public universities in the south – south Geo-political Zone of Nigeria (SSGPZN). The SSGPZN comprised of six states including Akwa Ibom, Bayelsa, Cross River, Delta, Edo and Rivers (Agba, Ikoh, Ushie and Bassey, 2010). SSGPZN has a total population of 21,014,655 (National Population Census, NPC, 2006) and occupies 85,303 square kilometers.

SSGPZN forms significant part of the Niger Delta Region of Nigeria and is one of the commercial nerves of the country, providing over 90 percent of the Nations Foreign earning (Ushie, Agba & Plang, 2015). The Zone is home to a number of public university (State and Federal) with a huge workforce, a number of those who are working in these public universities earn income that Agba and Ushie (2013) describes as starvation wages. This largely explains the supposedly poor work attitude among workers in these institutions with concomitant effect on service delivery.

Those owned by the Federal Government of Nigeria Include:

(i.) University of Calabar, Calabar, Cross River State.

(ii.) University of Uyo, Uyo, Akwa Ibom State.

(iii.) University of Port Harcourt, Port Harcourt, Rivers State.

(iv.) Federal University of Petroleum Resources, Effurun, Delta State.

(v.) Federal University, Otuoke, Bayelsa State.

The ones' run solely by State Government in the region, however with subvention from the Federal Government;

(i.) Cross River University of Technology, Calabar, Cross River State.

(ii.) Akwa Ibom State University.

(iii.) Delta State University, Abraka.

(iv.) River State University of Science and Technology

(v.) Niger Delta University, Bayelsa State. Thus, the sample for the study is drawn from the huge population of staff and students in six of these universities to access their perception of work ethics and service delivery in these public universities.

2 LITERATURE REVIEW

A review of relevant literature on good work ethics and service delivery in the Nigeria University System will serve as a usual background and theoretical perspective to this study. Reeves (2015) maintained that defining the specifics of good work ethics is essentially a subjective practice, but employers usually agree as to the characteristics of "good" work ethics looked for in their employees. He defined personal ethics as moral objectives or values that you believe in and practice as part of your life's philosophy (Reeves, 2015). When it comes to work, your ethics also encompass your overall attitude about work. Reeves sees good work ethics as a person who shows up on time with the willingness to do what it takes to get the job done without complain (Reeves, 2015). He presented some characteristics of "good" work ethics to include: honesty, personal integrity, responsibility, optimism, self-motivation and being a team player, commenting on personal integrity, Reeves (2015) say that "a person with personal integrity is trustworthy". He or she carries through with what he/she promises. For instance, if he or she cannot meet a deadline because of other demands that arise, he/she communicates this immediately to his or her supervisor. Personal integrity

also means that you don't blame someone else or make excuses for what you didn't do or mistakes you have made.

Also Schreiner (2015) contended that "people who posses a strong work ethic embody certain principles that guide their work behavior, leading them to produce high-quality work consistently and without the prodding that some individuals require to stay on track". Five of such principles advanced by him include: reliability, dedication, productivity, cooperation and character (Schreiner, 2015). According to Schreiner, (2015) reliability goes hand in hand with a good work ethic. For instance, if individuals with a good work ethic say they are going to attend a work function or arrive at a certain time, they do, as they value punctuality. Individuals with a strong work ethic often want to appear dependable, showing their employers that they are workers to whom they can turn. Because of this, he said, "they put effort into portraying and proving this dependability by being reliable and performing consistently (Schreiner, 2015).

In the view of Jenkins (2015) "a strong work ethic is vital to a company achieving its goals". According to him, certain factors come together to create a strong work ethic. These include: integrity, sense of responsibility, emphasis on quality, discipline and sense of teamwork. For instance Jenkins (2015) explained that an employee with a high sense of teamwork helps a team meet its goals and deliver quality work. These employees respect their peers and help where they can, making collaborations go smoother for the attainment of set goals.

Strengthening service delivery in the University Educational System is a key strategy to achieve its vision and mission as far as her obligation to the major stakeholders (students) is concerned. Currently, the literature pertaining to service delivery/quality in the higher education sector is significantly undeveloped (Beaumont, 2012). Traditionally, many researchers have focused their efforts on commercial services (Sultan and Wong, 2010). However, it is crystal clear that Nigerian public universities do not operates on ''commercial services", it has because increasingly apparent that institutions operating in higher education sector, previously not regarded as "profit making organizations", are attempting to gain a competitive advantage over their competition (Oldfield and Bren, 2000). As a result, universities (especially public universities) must consider themselves as a "profit-making organization" that is operating in a competitive market place.

In the light of the current economic climate, funding cuts and potential future decreases in students' numbers, Universities must realize that they are business entities, competing for resources and students both in the local and international market (Paswan and Ganesh, 2009). This means that University should be continually looking for appropriate ways of gaining a competitive advantage. Accordingly, the higher education sector must strive to deliver a high quality of service and satisfy its students, who some may term 'participating customers', to achieve sustainability in a competitive service environment. Like Beaumont (2012) puts it, ''universities can only be successful as long as their students are being offered something that they wish to buy, at a quality they feel is acceptable". The students here are seen as raw material. Therefore, the core activities are structured to process, sustain or change them to state that they become useful to the society. Are students really getting these services in our university system today? What could be responsible for students' inability to assess the required services?

There is no gain saying that Nigerian University System have in recent time faced series of challenges ranging from poor infrastructures (Okebukola, 2002), mass exodus of many brilliant lecturers (Akinnaso, 2012), inadequate funding and socio-political generated tensions (Olujuwon, 2004). Akinnaso (2012) maintained that it is not poor funding alone that has contributed to the present state of underachievement, but rather, the anti-intellectual stance of corrupt and valueless federal and state governments since the days of the military administration has also eroded ethical values and academic standards in the universities. Olujuwon (2004) does not see universities performing the role they were set for, According to him:

> *The tertiary institutions that are established to promote intellectual excellence, good virtues etc. have deviated…the majority of these institutions have misplaced their goals and allowed social, political factors of their environment to create crisis in their academic community (Olujuwon, 2004 p. 6).*

A combination of these problems Akinnaso (2012) contended, "have led to the weakening of university administration; poor teaching and learning outcomes; diminishing research and consultancy traditions; and questionable service to the community".

Another dimension of the problem affecting service delivery in the university system is the poor or near absence of record keeping. This scenario in turn affects preparation and

release of results and transcripts. Alubo (2014) for instance decry the spite of poor record keeping in Tertiary Educational Institutions (TEIs) when he said; “in most TEIs records are poorly kept such that the issuance of academic transcript is a tug of war”. He lamented many instances in which students wait months and years for transcripts which may never be issued. The challenges according to him relate to the analogue system of records keeping, poor work attitude and muddled up filing system, (Alubo, 2014).

In the face of these challenges, one would like to find out whether the students or graduates of our universities are actually benefiting from a robust education and training programmes to prepare them for work and life. In fact, have the universities been able to achieve their tripartite mandate of teaching, research and community service? These and many more is what this research paper seeks to unravel.

2.1 Theoretical perspective

The theoretical framework adopted for this study is basically the person - situational perspective to explain workplace behaviour. Significant research endeavours on workplace ethics have focused on the long standing “person-situation” debate (Allport, 1937; Mischel, 1968 and Baker, Hunt and Andrews, 2006). Those who are inclined to the individual (person) difference perspective believe that one’s values, motives and traits determine ethical behavior. In the same vein, those who are inclined to the situational perspective maintain that the characteristics of the situation or organizational environment account for variances in ethical behavior. For instance study conducted by Stanley Milgram on obedience that used fake electric shocks to study how people react to being asked to cause harm to others (Milgram Experiment), found correlations of situations and behaviors to be around .40. Moreover survey studies that compare the effects of situational variables on behavior show that the correlation between situation and behavior are also around the .30-.40 range (Epstein and O’Brien, 1985).

What can be logically inferred from the above is that a combination of individual attitude which has to do with his feelings, habit and beliefs couple with the cultural background of the worker affects his ethical behavior. That is, the way and manner the worker in the Nigerian University System behaves is a function of a given situation. Also, the value system of the individual worker in relation to the organizational environment and job requirements can positively or negatively affect the individual’s behavior to work. For instance, if a worker in the Nigerian Public University System holds a negative orientation

about the university environment in which he/she work, it will most likely affects his/her job performance and therefore service delivery. In other words, work attitude affects the way and manner a worker relates to, conceives and view his/her job.

3 METHODOLOGY

Survey design was adopted for this study; it was opted for because it is cheap as compared to other research design. It allows for objectivity and the sampling of opinions for workers. It allows for rational and objective establishment of relationships among variables. Agba et al (2010) observe that survey design samples allows for proper elucidation of respondents feelings, attitude and opinions over a given phenomenon. The study gathered information from purposively selected respondents from public universities in the Zone. Participants were selected from among the staff and students in six of the public universities with homogenous characteristics. Purposive method was used to select 660 staff and 300 students respectively.

Data was elicited from respondents using structured questionnaire, different questionnaire was used for staff (teaching and non-teaching) and students, the questionnaire was divided into two sections. Section A elicited the demographic data of respondents while Section B was used to collect data on workers perception of work ethics and service delivery in Nigeria Public Universities. Cronbach alpha reliability procedure was used in establishing the reliability of each of the sub-scale in the two instruments. Cronbach alpha reliability is one of the methods of measuring internal consistency. It depicts the degree to which the items in the instrument are internally consistent in measuring the variables of interest. The derived values ranged from .59 to .825. The Data elicited from respondents were coded for various response options as shown in Table 1.

Table 1: Coding of Variables

Response Option	Positive	Negative
Strongly agree (SA)	4	1
Agree (A)	3	2
Disagree (D)	2	2
Strongly disagree (SD)	1	4

Source: Kerlinger and Lee (2000)

As noted in Table 1, Positive response to a positive question is ranked highest (4), that is, for strongly agree (SD). While negative response to negative answer received the highest score of four (4) for strongly disagree. Other score follows the same sequence

3.1 Research hypothesis

The following hypotheses were derived from the afore mentioned objectives of the study.

1. Work ethics among workers in public university is not significantly high
2. There is no significant relationship between workers work ethics and the delivery of service in terms of prompt release of students results/transcripts in Public Universities.
3. Adhering to time table does not significantly relates to work ethics of workers in public universities.

4 RESULTS AND DISCUSSION

Hypothesis one

Work ethics among workers in public university is not significantly high. There is only one variable in this hypothesis, therefor population t-test was employed to test this hypothesis at p <.05, the result is presented in table 2.

Table 2: Population t-test of Work ethics among workers

Variable	N	Df	Mean	SD	t-value	Sig.
Sample mean	660	659	26.97	2.92		
					180.918	.000
Population mean			25.00			

Population mean is calculated thus (4+3+2+1) x 10 / 4 = 25.00

Source: Data from fieldwork

The result presented in Table 2 is to assess Work ethics among workers. The sample mean of 26.97 is greater than the population mean of 25.00 at p <.05; df = 659. By this result the null hypothesis is rejected while the alternate hypothesis is upheld. It can be inferred that workers in public universities work ethics is statistically significantly high. This result collaborate Jenkins (2015) who asserted that a strong work ethic is vital to a company achieving its goals. According to him, certain factors come together to create a strong work ethic. These include: integrity, sense of responsibility, emphasis on quality, discipline and sense of teamwork, and all these and many more is exhibited by staff (teaching and non-teaching) in the universities sampled.

Hypothesis two

There is no significant relationship between staff work ethics (integrity, initiative, responsibility and self-motivation) and service delivery in terms of prompt release of students' results/transcripts in Public Universities. Two variables were identified here, work ethics which is the independent variable and service delivery as the dependent variable. The result is presented in Table 3.

Table 3: Multiple Regression of characteristics of good work ethics and service delivery

Model	***R***	***R^2***	***Adj. R^2***	***Std Error of the Estimate***	
1	-555	.308	.261	9.258	
	Unstandardized coefficient		Standardized coefficient		
Model	**B**	**Std. Error**	**Beta**	**T**	**Sig.**
(constant)	55.449	20.514		2.703	.009
Integrity	1.487	.780	.227	2.100	.039
Responsibility	.192	.486	.044	.394	.694
Initiative	.972	.900	.240	1.344	.186
Self-motivation	1.733	.670	.273	2.587	.012
Service delivery	.247	.107	.239	2.298	.025

Source: Data from fieldwork

The result in table 3 shows that the combination of all the predictor variables (integrity, initiative, responsibility and self-motivation) are jointly related to the predicted variable (Service delivery), the correlation is positive and moderate (R = .555). More importantly, they accounted for 26.1% of the variance in Service delivery.

The regression co-efficient shows that three independent variables out of four independents variables i.e. integrity ($\beta = .227$, $t = 2.100$, $p < .05$), Self-motivation ($\beta = .273$, $t = 2.587$, $p < .05$) and Initiative ($\beta = .239$, $t = 2.295$, $p < .05$) were most influential independent variables in the prediction of Service delivery, because they were statistically significant. Corollary to this table is that Responsibility ($\beta = .044$, $t = .394$, $p > .05$) is not influential in the prediction of Service delivery.

The finding is in agreement with Reeves, (2015) who posited that when it comes to work, your ethics also encompass your overall attitude about work. Reeves sees good work

ethics as a person who shows up on time with the willingness to do what it takes to get the job done without complain. He presented some characteristics of "good" work ethics to include: honesty, personal integrity, responsibility, optimism, self-motivation and being a team player. Also with regards to prompt release of result the study also confirms Alubo (2014) who reported the spite of poor record keeping in Tertiary Educational Institutions (TEIs) when he said; "in more TEIs records are poorly kept such that the issuance of academic transcript is a tug of war". He lamented many instances in which students wait months and years for transcripts which may never be issued. The challenges according to him relate to the analogue system of records keeping, poor work attitude and muddled up filling system. This to a large extent is responsible for the poor service delivery witnessed in most of the public universities.

Hypothesis three

Adhering to time table does not significantly affect service delivery among workers in public universities. Two variables were identified here. Staff adhering to time table which is the independent variable and service delivery as the dependent variable. The result is presented in Table 4.

Table 4: Pearson product moment correlation of staff adhering to time table and service delivery

Variables	N	Mean	SD	r-value	Sig.
Staff adhering to time table	960	14.73	2.52		
				-0.693	.000
Service delivery	960	24.50	3.80		

*significant at P < .05; critical r-value = 0.138; df = 958.

Source: Data from fieldwork

Pearson product moment correlation analysis was employed to investigate the relationship between staff adhering to time table and service delivery. As presented in Table 3 the calculated r-value of -0.693 is greater than the critical r-value of 0.138 with 958 degree of freedom, this result therefore implies that, the null hypothesis is rejected. It therefore mean that staff adhering to time table statistically significantly affects service delivery among workers in public universities. The negative correlation value shows that while one variable is increasing (not adhering to time table) the other variable is decreasing (service delivery). The finding lends credence to Schreiner, (2015) assertion that reliability goes hand in hand with a good work ethic. For instance, if individuals with a good work ethic say they are going to attend a work function or arrive at a certain time, they do, as they value punctuality. Individuals with a strong work ethic often want to appear dependable, showing their

employers that they are workers to whom they can turn. Because of this, he said, "they put effort into portraying… and proving...this dependability by being reliable and performing consistently. A cursory look at the work environment in our public universities depicts a very poor work ethics among staff in these institutions. For instance, both teaching and non-teaching staff (including management) are often used to observing what is called "African Time" in carrying out their daily work assignment with concomitant negative implication on their overall performance and therefore service delivery.

5 CONCLUSION

It can be concluded that good work ethics can be achieved only with dedicated and committed leadership. The public universities in Nigeria are faced with series of challenges ranging from poor infrastructures, mass exodus of many brilliant lecturers, inadequate funding and socio-political generated tensions, anti-intellectual stance of corrupt and valueless federal and state governments among others has eroded ethical values and academic standards in the universities. It is therefore suggested that federal institutions must put in place mechanism that encourages good work ethics. Leadership in Nigeria public university should be people-centered. This is because human are central in the university system and the focus is on service rather than product and therefore the students should be seen as raw materials. In addition staff should be encourage to imbue the culture of creative thinking (initiative) and learn to speak with one voice. Further more in other to promote best practices management should encourage and motivate staff to fully realize their potentials and contribute positively to service delivery in our public universities. Finally, there should be flexible service delivery so as to help universities deliver and sustain transformational change and improvement, including real efficiency savings as well as other measurable strategic and educational value through the streamlined flexible provision of administrative and students services.

References

Abga, A. M. O. & Ushie, E. M. (2013). Wage differentials and industrial disputes in Nigeria Hospitals. *IOSR journal of Business and Management*. 11 (5), 01-12.

Abga, A. M. O., Ikoh, M., Ushie, E. M. & Bassey, A. O. (2010). Telecommunication Revolution: Implication on criminality and family crises in the South-south states of Nigeria. *International Journal of Computer and Information Science*, 3 (1) 42 – 51.

Akinnaso, N. (2012). University Education in Nigeria: problems and solutions. *Punch*, March 13, 2012.

Allport, G. W. (1937). *Personality; A psychological interpretation.* New York: H.Holt and Company.

Alubo, O. (2004) Transparency, accountability and ethical values in the management of Nigeria tertiary educational institutions. *Journal of Social Issues*, 7 (1) 1 – 17.

Aluko, M. A. O. (2008). *Major concepts in the study of work behaviour*. In Olakunle A. Ounbameru & Oribabor, E. P. (eds.), *Industrial Sociology*. Ibadan: Penthouse publications (Nig)

Baker, T. L., Hunt, T. G. & Andrews, M. C. (2006) promoting ethical behavior and organizational citizenship behaviours: the influence of corporate ethical values. *Journal of Business and Research*, 59 (2006) 849 – 857.

Beaumont, D. J. (2012). Service Quality in higher education: the students' viewpoint. A dissertation submitted to the University of Manchester for the degree of Bachelor of Science in the Faculty of Humanities (ug *handbook.portals.mbs.ac.uk*)

Epstein, S. & O'Brien, E. J. (1985). The person-situation Debate in Historical and current perspective. *Psychological Bulletin*, 98 (3), 513 -537.

Gidens, A. (2009). *Sociology (6th edition)* UK: polity press.

Kerlinger, F. N. & Lee, H. B. (2000). *Foundations of behavioural research (4th edition).* New York: Wadsworth Publisher.

Milgram, S. (1975). *Obedience to authority*. New York: Harper & Row.

Mischel, W. (1968). Personality and assessment. New York: Wiley.

Okebukola, P. (2002). *The status of university education in Nigeria.* National University Commission, Abuja, Nigeria.

Okoh, A. O. (2003). Enhancing productivity through improved work attitude in the new millennium. *Enterprise*, 5 (1). 1 – 13.

Okojie, J. (2013). *Quality Assurance and the challenges of mandate delivery in Nigerian Universities.* Being convocation lecture presented during the 18th convocation of Lagos State University, Lagos, Nigeria. February 19, 2013.

Oldfield, B. M. & Bren, S. (2000). Students perceptions of service quality in Uk university business and management faculty. *Quality assurance in Education*, 8 (2), 85 -95

Olujawon, O. T. (2004). *Education in Nigeria: a futuristic perspective.* Central Educational Service, Lagos Nigeria.

Paswan, A. & Ganesh, G. (2009). Higher education institutes: satisfaction and loyalty among international students. *Journal of Marketing for Higher Education*, 19 (1), 65 – 84.

Poppola, D. (1986). *Nigeria workers and work Ethics.* In Damachi G. U. and Fashoyin T. (eds.) *Contemporary problems in Nigerian Industrial Relations*. Lagos; Development Press Limited.

Reeves, L. (2015). What are good work ethics? Online available at: *http://woman.thenest.com/good-work-ethics-2725.html* (retrieved 5/03/2015)

Schreiner, E. (2015). Five characteristics of a good work ethics. Online available at: *http://smallbusiness.hron.com/five-characteristics-geo-work-ethic*. (retrieved 5/03/15)

Sultan, P., & Wong, H. Y. (2010) Service quality in Higher Education- a review and research agenda. *International Journal of Quality and Service Sciences*, 2 (2), 259 – 272.

Ushie, E. M., Agba, A. M. O. & Plang, J. P. (2015). Determinants of moonlighting among Nigeria workers: A within and external comparative analysis. *Australian Journal of Humanities and Social Studies*, 02(1)21 – 39.

JCGIRM Journal of Corporate Governance, Insurance, and Risk Management (JCGIRM)
2015, Volume 2, Series 3

Pages 131-147

EMPIRICAL ANALYSIS OF BANK RECAPITATLISATION IN NIGERIA (1986-2011)

Imahe Godfrey[a,*],

[a] College of Education, Igueben, Edo State, Nigeria

ABSTRACT

In 1986, Nigeria introduced a structural adjustment programme (SAP) and one of the policy implications of the programme was the deregulation of the economy. And so the banking sector was also deregulated. This led to sudden increase in the number of banks. However, distress soon hit the financial sector of the economy. In order to avoid the bitter consequences of bank failure, the government established the Nigeria Deposit Insurance Corporation (NDIC) to augment the regulatory power of Central Bank of Nigeria (CBN) as a watch dog over banks and ensure stable, safe and sound system of the banking sector. Various attempts aimed at revamping the banking sector, ranging from recapitalization to outright liquidation failed.In July 2004, a new method aimed at salvaging the banking sector was announced by the CBN. This method includes banking sector reform and bank consolidation. The main thrust of this study is to examine the impact of consolidation on Nigeria economy. To achieve this, SPSS Version 19 econometric software package regression method was adopted. The ordinary least squares (OLS) analytical technique was applied to estimate the empirical relationship between the dependent and independent variables. The study also carried out chow test in order to determine the structural stability of the regression. The study revealed that Nigeria bank consolidation has not impacted significantly on Nigeria's economic growth under the study period. The study therefore recommended that banking regulations such as bank consolidation needs to be a component of total reform framework of monetary authority to ensure effectiveness in Nigeria banking sector performance.

ARTICLE INFO

Keywords:

Bank Recapitalization, Nigeria

**Corresponding author:*

anthonyoyase@gmail.com
(Imahe Godfrey)

Article history:

Article Submitted 14-04-2015
Article Accepted 20-06-2015

**Article previously published in EJEM 2015, vol 2, No. 3

1. INTRODUCTION

The banking sector is the nerve Centre of any modern economy, being the repository of people's wealth and supplier of credit which lubricates the engine of growth of the entire economic system. However, the lingering problem of bank distress and its attendant effects had remain one of the most disturbing features of the Nigeria banking sector in recent times. While concerted efforts are being made to address the menace, the magnitude and depth of distress in the system has remained an issue of concern to the government, the regulatory authorities, bankers as well as the general public.

Although these reforms efforts in the banking sector have been acclaimed to be necessary for Nigeria's economic growth, the Nigerian financial sector is still being characterized by low mobilization of savings to the real sector of the economy (Balogun, 2007). However, this study intends to examine the impact of bank consolidation on the Nigerian economy.

Conceptual issues

It is pertinent at this juncture to explore the relevant concepts which underpin this study in what follows below. This is with a view to clearly demonstrating their referents in the study.

(a) Bank Recapitalization

Several methods had been prescribed for the arrest of the distress syndrome that pervaded the Nigerian banking industry. In 1997, Federal Government budget seemed to have directed that every commercial and merchant banks to beef up its paid up share capital to N500 million not later than 31st December 1998, the objective was to achieve recapitulation of banks as one of the method prescribed for the arrest of widespread distress in the Nigeria banking industries.Maduka and Onwuka (2013) opined that financial reforms in Nigeria dates back to 1952, when the Banking Ordinances was enacted. At the inception of the 1987 financial reforms, the banking system was highly repressed. According to Emenuga (2005) interest rate controls, selective credit guidelines, exchange rate regulations, ceiling on credit expansion and use of reserve requirements and otherdirect monetary control instruments characterized the reforms. Entry into the banking system was also restricted.

Consequently, the reform package of this era was to dismantle the regulation of interest rates, introduce liberalization and the establishment of a market based autonomous foreign exchange market, among others.

Maduka and Onwuka (2013) asserted that this reform was also introduced to enable Nigerian banks to become active domestic and global players in the financial markets.

(b) Consolidation and Convergence

To consolidate is to make solid or strong. According to new English Oxford dictionary, it means solidification, making solid or strong.According to Iganiga and France (2006), consolidation and convergence are interrelated since they are both achieved through mergers and acquisition. A merger is the combination of two or more separate firms into a simple firm, the resulting firm taking either acquire or new identity; while acquisition on the other hand takes place where a company takes over the controlling shareholding interests of another with two separate companies evolving at the end. The target company either becomes a division or subsidiary of the acquiring company.Bank consolidation is viewed as the reduction in the number of banks and other deposit taking institutions with a simultaneous increase in size and concentration of the consolidated entities in the sector (BIS 2001). It is mostly motivated by technological innovations, deregulation of financial services enhancing

intermediation and increase emphasis on shareholders' value, privatization and international competition (Berger et al 1999 and De Nicolo et al 2003).Berger (1998) differentiated consolidation from convergence, while consolidation involves mergers and acquisition between/among 'same' forms e.g. banks, convergence involve the consolidation of similar firms like banks and other financial institutions. A "newer" concept of consolidation views bank merger as not just about adjusting inputs to affect costs but also involves adjusting input (product mixes) to enhance revenues.

(c) Conclusion

This study is carried out to assess the impact of bank consolidation on a developing economy. That is to examine whether bank consolidation has worsened competition in Nigeria.

2. METHOD OF DATA ANALYSIS

The research techniques adopted for this study is the ordinary least squares (OLS) analytical techniques which was used to estimate the empirical relationship between the dependent and independent variables. The stability of the parameter was also carried out using Chow test.

Model Specification:

The model of the study considering pre consolidation (1986-2003), consolidation (2004-2008) and the pool period (1986-2011) bearing in mind the objectives of the study, we specify our model thus:

$LGDP = a_0 + a_1 Log\ M2/GDP + a_2 LogINR + a_3 LogCRR + a_4 LogTNB + a_5 LogBC + a_6 LogCPS + U.$

A prior expectation: $a_1>0$, $a_2<0$, $a_3<0$, $a_4>0$, $a_5>0$, and $a_6>0$.

Where:

GDP = Growth in real gross domestic products

M2/GDP = Ratio of broad money to gross domestic product (Financial deepening)

INR = Interest rate margin

CRR = Cash reserve ratio

TNB = Total numbers of Banks

BC = Bank Consolidation (proxy by financial bank capitalization)

CPS = Credit to private sectors

U = Error term

3. DATA PRESENTATION

Annual time series data for the period 1986 to 2011 were employed for the empirical analysis. The time frame is divided into three periods that is pre – bank consolidation 1986 to 2003, bank consolidation period 2004 to 2008 and the pool period 1986 to2011. These data reflect the variables in the model specified in chapter three. The data fitted into the model are shown in the table below.

Table 4.1: GDP and Financial Indicators

YEARS	GDP N'M	INT (%)	CPS N'M	M2/GDP (%)	TNB	CRR (%)	BC N'M
1986	69147	10.5	18299.9	39.6	29	1.7	6794.8
1987	105222.8	17.5	21892.5	32	34	1.4	8297.6
1988	139085.3	16.5	25472.5	32.7	42	2.1	10020.8
1989	216797.5	26.8	29643.9	21.7	47	2.9	12848.6
1990	267550	25.5	35436.6	25.7	58	2.9	16358.4
1991	312139.7	20.01	42079	28	65	2.9	23125.0
1992	532613.8	29.8	79958.9	24.2	65	4.4	31272.6
1993	683869.8	18.32	95529.7	29	66	6	47436.1
1994	899863.2	21	151000.3	29.7	65	5.7	663680
1995	1933212	20.81	211358.6	16.5	64	5.8	180305.1
1996	2702719	19.74	260613.5	13.7	64	7.5	281815.8
1997	2,801,973	13.54	319512.2	15.3	64	7.8	281887.2
1998	2708430	18.29	372574.1	19.4	54	8.3	262517.3
1999	3194015	21.32	455205.2	21.9	54	11.7	300041.1
2000	4582127	17.98	596001.5	22.6	54	9.8	472290.0
2001	4725086	18.29	854999.3	27.8	90	10.8	662561.3
2002	6912381	24.4	955765.1	23.1	90	10.6	764975.8
2003	8487032	20.48	1211993	23.4	90	10	1359274.2
2004	11411067	19.15	1534448	19.8	89	8.6	2112549.6
2005	14572239	17.85	20073356	19.3	25	9.7	2900062.1
2006	18564595	17.95	2650822	21.7	25	2.6	5120000
2007	2065,251	16.94	5056721	28.1	25	2.8	13294059

2008	23842126	15.94	8059549	37.7	24	2.3	9562970
2009	24712670	16.7	10206087	43.6	21	3.2	7030.8
2010	33184394	16.5	9703701	35.11	21	4	8781258
2011	*38965123*	*15.7*	*14183592*	*37.6*	*21*	*8*	*6589123*

Sources:

CBN: Annual Report and statement of Accounts (Various issues)

CBN: Statistical Bulletin (Various issues)

NDIC: Annual Report and Statement of Account (Various issues)

World Bank: World Development indicators

4. DATA ANALYSIS

Using the data and the period 1986 to 2011, the researcher estimated the equations and analyzed the prediction equation results of the model, which was specified in chapter three, using SPSS Version 19 econometrics software package to run the OLS. Gross Domestic Product (GDP) was used as a proxy for economic growth, which is the dependent variable and the independent variables are market capitalization (BC), credit to the private sectors (CPS), interest rate (INT), cash reserve ratio (CRR), total number of banks (TNB) and financial deepening (M_2/GDP).

Simple regression analysis was carried out between the dependent and independent variables. All the variables were in logarithms form. The results obtained from the estimation equation for pre-bank consolidation are depicted on the table below.

Table 4.2: Regression results (1986 to 2003).

Dependent variables is LGDP

Explanatory Variables (Regressors)	Coefficient	Std Error	T - Statistic	P – Value
C	3.954	0.238	16.586	0.000
LBC	-0.296	0.034	-1.073	0.306
LCPS	1.391	0.059	3.777	0.003
LCRR	-0.424	0.095	-1.465	0.171
LINT	0.080	0.89	0.840	0.419
LM_2/GDP	0.090	0.076	0.969	0.353

LTNB	0.345	0.105	2.429	0.033

R – Squard = 0.939

Adjusted R – squard = 0.906

F – Statistic = 28.399

Prob. (F-Statistics) = 0.000

Durbin – Watson statistic = 1.659

RSS_1 = 0.10

DF = 11

The regression results show a negative relationship between Gross Domestic Product and market capitalization. The result does not conform to the a priori expectation. The value of the coefficient LBC is -0.296. This implies that 1 percent increase in Bank consolidation will lead to 0.296 percent decrease in economic growth when other factors are held constant. The variable was not statistically significant at 10 percent level since the T – statistic calculated value of 1.073 is less than the T – statistic value of 1.796. Therefore, we accept the null hypothesis that market capitalization has no significant impact on economic growth in Nigeria. Under capitalization has not promotes economic growth during the pre-banking consolidation.

The coefficient of credit to the private sector (LCPS) is positively signed. This indicates that a direct relationship exists between credit to the private sector and economic growth. This is in line with the a priori expectation. The value of the coefficient is 1.391. This implies that 1 percent increase in credit to the private sector will lead to 1.391 percent increase in economic growth, when other factors are held constant. The variable LCPs was also statistically significant at 1 percent level of significant, since the T – statistic calculated value of 3.777 is greater than the T-statistic table value of 3.106. Therefore, we accept the alternate hypothesis that financial bank credit to the private sector has a significant impact on economic growth during the pre-consolidation period. This implies that credit to the private sector has the potential to grow the Nigeria economy during the pre-consolidation all things being equal.

The coefficient of cash reserve ratio (LCRR) is -0.424. This implies that an inverse relationship exists between cash reserve ratio and economic growth. This is in line with the a priori expectation such that 1 percent increase in CRR will lead to 0.424 percent decrease in economic growth, when other factors are held constant. The variable CRR was not statistically significant at any level. So, we accept the null hypothesis that cash reserve ratio has no significant impact on economic growth in Nigeria under the reference period. This result indicates that increase in cash reserve ratio is used by the monetary authority to curtail the amount of loans that the banks can make and hence negatively affects economic growth during the pre-consolidation period.

The coefficient of interest rate (LINT) is 0.080. This indicates that direct relationship exists between interest rate and economic growth. This is not consistent to the a priori expectation hence 1 percent increase in interest rate will lead to 0.080 percent increase in economic growth when other variables are held constant. The variable LINT was not statistically significant at any level. Hence, we accept the null hypothesis that interest rate has no significant impact on economic growth in Nigeria during the pre-consolidation. The non-significance of this variable is as a result of structural inefficiencies, market imperfections or government interference in the interaction of market forces that characterized the Nigerian money market during the pre-consolidation period.

The regression result shows that positive relationship exists between financial deepening and economic growth. This is consistent to the apriori expectation. The value of the coefficient of financial deepening (LM_2/GDP) is 0.090. This implies that 1 percent increase in financial deepening will lead to 0.090 percent increase in economic growth. The variable was not statistically significant at level of significance with t-statistic calculated value of 0.969 which is less than t-statistic table of 1.796. Therefore, we accept the null hypothesis that financial deepening has no significant impact on economic growth in Nigeria during the pre-consolidation period. This result indicates that financial development does not enhance growth in the Nigerian economy pro the consolidation.

The regression result shows that a positive relationship exists between total number of banks and economic growth. This is consistent to the a priori expectation. The coefficient of total number of bank (LTNB) is 0.345. This implies that 1 percent increase in LTNB will lead to 0.345 percent increase in economic growth when other factors are held constant. The variable was also statistically significant 5% percent level of significance with a t – statistic calculated value of 2.429 which is greater than t-statistic table value of 2.201. Thus, we accept the alternate hypothesis that total number of banks has a significant impact on economic growth in Nigeria.

The coefficient of determination (R^2) from our results is given as 0.939. This implies that 94 percent of the variation in Nigeria economic growth is accounted for by the included explanatory variables during pre-bank consolidation while 6 percent is unexplained due to error terms. The adjusted coefficient of determination (R^{-2}) is given as 0.906. The means that precisely 91 percent of the variations in economic growth of Nigeria are accounted for by the included variables after the co-efficient of determination is been adjusted to make it intensive to the number of included variables while 9 percent is unaccounted for due to error terms.

Also the statistical test for joint significance of the parameter estimate (i.e. F statistic) using 95% confidence interval and 6, 11 degree of freedom gives the figure 3.09 from the statistical table. And since the calculated F – statistics from our result gives 28.393, which is higher than that from the table, we reject the null hypothesis and accept the alternate hypothesis, concluding that the joint influence of all included explanatory variables is significant and therefore cannot be ignored in explaining economic growth in Nigeria.

The D.W statistic value 1.659 indicates absence of auto-correlation in the analysis, which means that the estimate is unbiased, consistent and reliable for prediction and policy formulation.

In summary, based on the above, it can be deducted that consistent with the hypothesized relations, credit to the private sector and total number of banks are some of the significant financial indicators that determine economic growth in Nigeria during the pre-bank consolidation period.

The results obtained from the estimation equation for bank consolidation are depicted in the table below.

Table 4.3: Regression results (1986-2011).

Dependent variables is LGDP

Explanatory Variables (Regressor)	Coefficient	Std Error	T – Statistics	P – Value
C	30.375	44.681	0.680	0.567
LBC	0.231	0.353	0.571	0.626
LCPS	1.024	1.936	1.073	0.396
LCRR	1.067	1.966	1.771	0.219
LINT	-0.379	24.559	-0.356	0.756
LM_2/GDP	0.655	4.064	1.041	0.407
LTNB	1.289	3.321	1.295	0.325

R – Squared = 0.857

Adjusted R – Squared = 0.426

F – Statistic = 1.990

Prob. (F - Statistics) = 0.370

Durbin – Watson statistic = 2.356

RSS_2 = 0.876

DF = 2 (DF = N – K, Where N = No of observation and K explanatory variable).

The regression results show a positive relationship between Gross Domestic Product and market capitalization. The result conforms to the a priori expectation. The value of the coefficient LBC is 0.231. This implies that 1 percent increase in Bank consolidation will lead to 0.231 percent increase in economic growth when other factors are held constant. The variable was not statistically significant at 10 percent level of significant since the T – statistic calculated value of 0.571 is less than the T – statistic value of 1.796. Therefore, we accept the null hypothesis that market capitalization has no significant impact on economic growth in Nigeria under the bank consolidation period. The result indicates that increased in market capitalization has not promotes economic growth during the banking consolidation but the positive nature of the variable means that it has the tendency to grow the Nigeria economy.

The coefficient of credit to the private sector (LCPS) is positively signed. This indicates that a direct relationship exists between credit to the private sector and economic growth. This is in line with the a priori expectation. The value of the coefficient is 1.024. This implies that 1 percent increase in credit to the private sector will lead to 1.024 percent increase in economic growth, when other factors are held constant. The variable was not statistically significant at 10 percent level of significance since the T-statistic calculated value

of 1.073 is less than the T – statistic value of 1.796. Therefore, we accept the null hypothesis that credit to the private sector has no significant impact on economic growth in Nigeria under the bank consolidation period. This implies that credit to the private sector has no potential to grow the Nigeria economy during the bank consolidation all things being equal.

The coefficient of cash reserve ratio (LCRR) is 1.067. This implies that direct relationship exists between cash reserve ration and economic growth. This is not in line with the a priori expectation such that 1 percent increase in CRR will lead to 1.067 percent increase in economic growth, when other factors are held constant. The variable CRR was not statistically significant at any level. So, we accept the null hypothesis that cash reserve ratio has no significant impact on economic growth in Nigeria under the reference period. This result indicates that increase in cash reserve ratio is used by the monetary authority to curtail the amount of loans that the banks can make and hence positively affects economic growth during the bank consolidation period.

The coefficient of interest rate (LINT) is -0.379. This indicates that indirect relationship exists between interest rate and economic growth. This is consistent to the a priori expectation hence 1 percent increase in interest rate will lead to 0.379 percent decrease in economic growth when other variables are held constant. The variable LINT was not statistically significant at any level. Hence, we accept the null hypothesis that interest rate has no significant impact on economic growth in Nigeria during the bank consolidation. The consistent of this variable is as a result of structural efficiencies, market perfections or no government interference in the interaction of market forces that characterized the Nigerian money market during the bank consolidation period.

The regression result shows that positive relationship exists between financial deepening and economic growth. This is consistent to the a priori expectation. The value of the coefficient of financial deepening (LM_2/GDP) is 0.566. This implies that 1 percent increase in financial deepening will lead to 0.566 percent increase in economic growth. The variable was not statistically significance at level of significance with t-statistic calculated value of 1.041 which is less than t-statistic table value of 1.796. Therefore, we accept the null hypothesis that financial deepening has no significant impact on economic growth in Nigeria during the consolidation period. This result indicates that financial development does not enhance growth in the Nigerian economy during the bank consolidation.

The regression result shows that a positive relationship exists between total number of banks and economic growth. This is consistent to the a priori expectation. The coefficient of total number of bank (LTNB) is 1.289. This implies that 1 percent increase in LTNB will lead to 1.289 percent increase in economic growth when other factors are held constant. The variable was not statistically significance at level of significance with t-statistic calculated value of 1.295 which is less than t-statistic table value of 1.796. Therefore, we accept the null hypothesis that total number of bank has no significant impact on economic growth in Nigeria during the consolidation period.

The coefficient of determination (R^2) from our result is given as 0.857. This implies that 86 percent of the variation in Nigeria economic growth is accounted for by the included explanatory variables during bank consolidation while 14 percent is unexplained due to error

terms. The adjusted coefficient of determination (R^{-2}) is given as 0.426. This means that precisely 43 percent of the variations in economic growth of Nigeria are accounted for by the included variables after the co-efficient of determination is been adjusted to make it intensive to the number of included variables while 57 percent is unaccounted for due to error terms.

Also the statistical test for joint significance of the parameter estimate (i.e. F statistic) using 95% confidence interval and 6, 2 degree of freedom gives the figure 19.2 from the statistical table. And since the calculated F-statistics from our result gives 1.990, which is lesser than that from the table, we accept the null hypothesis and reject explanatory variable since is not significant. This implies that the financial indicator perform poorly to Nigeria's economic growth during the consolidation era in the Nigerian financial sector.

The D.W statistic value 2.356 indicates absence of auto-correlation in the analysis, which means that the estimate is unbiased, consistent and reliable for prediction and policy formulation.

In summary, based on the above, it can be deduced that consistent with the hypothesized relations that the entire variables were consistent to the a priori expectation but none was significant at any level. The F statistic shows that bank consolidation has not impacted significantly on Nigeria economic growth under the study period.

The results obtained from the estimation equation are depicted in the table below.

Table 4.4: Regression results (1986 - 2011)

Dependent variables is LGDP

Explanatory Variables (Regressors)	Coefficient	Std Error	T – Statistic	P – Value
C	2.108	2.303	0.915	0.371
LBC	0.284	0.133	1.307	0.207
LCPS	0.638	0.214	2.063	0.053
LCRR	-0.282	0.576	-1.150	0.265
LINT	0.092	1.018	0.644	0527
LM_2/GDP	0.362	0.825	2.234	0.037
LTNB	0.360	0.788	1.371	0.186

R – Squared	=	0.724
Adjusted R – squared	=	0.636
F – Statistic	=	8.295
Prob. (F-Statistics)	=	0.0000

Durbin – Watson statistic	=	2.136
SSR_3	=	3.015
DF	=	19

The regression results show a positive relationship between Gross Domestic Product and market capitalization. The result conforms to the a priori expectation. The value of the coefficient LBC is 0.284. This implies that 1 percent increase in Bank consolidation will lead to 0.284 percent increase in economic growth when other factors are held constant. The variable was not statistically significant at any level of significance. Therefore, we accept the null hypothesis that capital market capitalization has no significant impact on economic growth in Nigeria under the study period. The result indicates that increased market capitalization promotes economic growth. This finding is consistent with Fadare (2010), Iganiga (2010) and Ofanson (2010).

The coefficient of credit to the private sector (LCPS) is positively signed. This indicates that a direct relationship exists between credit to the private sector and economic growth. This is in line with the a priori expectation. The value of the coefficient is 0.638 percent increase in economic growth, when other factors are held constant. The variable LCPs was also statistically significant at 10 percent level of significant, since the T-statistic table value of 1.729. Therefore, we accept the alternate hypothesis that financial bank credit to the private sector has a significant impact on economic growthindicates that credit to the private sector if properly channeled to productive sectors such as agriculture and manufacturing sectors, will lead to economic growth in the country.

The coefficient of cash reserve ratio (LCRR) is -0.282. This implies that an inverse relationship exists between cash reserve ratio and economic growth. This is in line with the a priori expectation such 1 percent increase in CRR will lead to 0.282 percent decrease in economic growth, when other factors are held constant. The variable CRR was not statistically significant at any level. So, we accept the null hypothesis that cash reserve ratio has no significant impact on economic growth in Nigeria under the reference period. This result indicates that increase in cash reserve ratio is used by the monetary authority to curtail the amount of loans that the banks can make and hence negatively affects economic growth. In this way, the Central Bank could be said to be pursuing a contractionary monetary policy. When investors cannot get new loans to expand their investments, it reduces the level of total output in the economy. Fadare (2010) noted that a reduction in output affects the level of employment and prices, as less money is available for purchasing goods.

The coefficient of interest rate (LINT) is 0.092. This indicates that direct relationship exists between interest rate and economic growth. This does not conform to the a priori expectation hence 1 percent increase in interest rate will lead to 0.092 percent increase in economic growth when other variables are held constant. The variable LINT was not statistically significant at any level. Hence, we accept the null hypothesis that interest rate has no significant impact on economic growth in Nigeria. The non-significance of this variable is as a result of structural inefficiencies, market imperfections or government interference in the interaction of market forces that characterized the Nigerian money market during the period.

The regression result shows that positive relationship exists between financial deepening and economic growth. This is consistent to the a priori expectation. The value of the coefficient of financial deepening (LM_2/GDP) is 0.362. This implies that 1 percent increase in financial deepening will lead to 0.362 percent increase in economic growth. The variable was also statistically significance at 5 percent level of significance with t-statistic calculated value of 2.238 which is greater than t-statistic table value of 2.093. Therefore, we accept the alternate hypothesis that financial deepening has a significant impact on economic growth in Nigeria. This result indicates that financial development is as a result of persistent policies initiated by the monetary authority to liberalized the financial sector in order to enhancing growth in the economy.

The regression result shows that a positive relationship exists between total number of banks and economic growth. This is consistent to the a priori expectation. The coefficient of total number of bank (LTNB) is 0.360. This implies that 1 percent increase in LTNB will lead to 0.360 percent increase in economic growth when other factors are held constant. The variable was not statistically significant at 10 percent level of significance with a t-statistic calculated value of 1.371 which is less than t-statistic table value of 1.729. Thus, we accept the null hypothesis that total number of banks has no significant impact on economic growth in Nigeria. However, the non-significance nature of the variable indicate that the number of banks services to various economic units and hence insignificant in Nigerian economic growth.

The coefficient of determination (R^2) from our result is given as 0.724. This implies that 72 percent of the variation in Nigeria economic growth is accounted for by the included explanatory variables while 28 percent is unexplained due to error terms. The adjusted coefficient of determination (R^2) is given as 0.636. This means that precisely 64 percent of the variations in economic growth of Nigeria are accounted for by the included variables after the co-efficient of determination is been adjusted to make it intensive to the number of included variables while 36 is unaccounted for due to error terms.

Also the statistical test for joint significance of the parameter estimate (i.e. F statistic) using 95% confidence interval and 6, 19 degree of freedom gives the figure 2.60 from the statistical table. And since the calculated F- statistics from our result gives 8.295, which is higher than that from the table, we reject the null hypothesis and accept the alternate hypothesis, concluding that the joint influence of all included explanatory variables is significant and therefore cannot be ignored in explaining economic growth in Nigeria.

The D.W statistic value 2.136 indicates absence of auto-correlation in the analysis, which means that the estimate is unbiased, consistent and reliable for prediction and policy formulation.

In summary, based on the above, it can be deduced that consistent with the hypothesized relations, credit to the private sector and financial deepening are some of the significant financial indicators that determine economic growth in Nigeria under the reference period.

5. THE CHOW TEST

When we use a regression model involving time series data, it may happen that there is a structural change, we mean that the values of the parameter of the model do not remain the same through the entire time period (Gujarati 2006). Sometime, structural change may be due to external force or due to policy change. In order to carry out this test in our study, our regression was divided in two samples and obtained the residual sum of square from the various sample i.e. pre-bank consolidation and consolidation and pool period.

However, for our sample from regression result $RSS_3 = 3.01$ and DF = 19

$RSS_1 = 0.10$ and DF = 11

$RSS_2 = 0.876$ and DF = 12

Where

RSS_3 is the restricted residual sum of squares (pool period)

RSS_1 is the residual sum of squares of pre-bank consolidation

RSS_2 is the residual sum of squares of bank consolidation

Since the two sets of samples are deemed independent, we can add RSS_1 and RSS_2 to obtain unrestricted residual sum of squares (RSS_{UR}) i.e.

$RSS_{UR} = RSS_1 + RSS_2$ with DF $(n_1 + n_2 – 2k)$

$RSS_{UR} = 0.010 + 0.876 \quad = 0.886$

Therefore, the chow test F ratio = $\frac{(RSS_R + RSS_{RU})/K}{RSS_{UR}/(n_1 + n_2 – 2k)}$

Where, K is number of parameters estimated

$= (3.015 – 0.886)/6$

$= 0.886/13$

$= \underline{0.3773}$

$0.0683 \quad = 5.500$

From the F statistic tables, we find that for 6 and 19 DF the 5 percent critical F value is 2.63. This is less than the calculated value of 5.50. This implies that banking sector in Nigeria has under gone structural change within the study period. The implication of this result is that the regression for pre bank consolidation is different from consolidation period and the result obtained from the pooled period is dubious. It cannot be relied upon.

6. SUMMARY, CONCLUSION AND RECOMMENDATIONS

Summary

From the findings of the study, the following can be inferred.

i. Bank consolidation has no significant impact on economic growth in Nigeria under the study period.

ii. Credit to private sector has direct and significant impact on economic growth during pre-bank consolidation period but it was insignificant during consolidation

iii. Cash reserved ratio has an inverse, but insignificant impact on economic growth during pre-bank consolidation but has a direct impact on economic growth during bank consolidation. This is an indication that the central bank is pursuing a contractionary monetary policy.

iv. The interest rate has an insignificant influence on Nigeria economic growth under the pre and bank consolidation period

v. The financial deepening has positive and significant effect on Nigeria economic growth during the pre-consolidation period but in significant during bank consolidation. This finding indicates that there is a financial development in the country which enhances her economic growth under the pre-bank consolidation period.

vi. The total number of bank has direct and significant impact on economic growth in Nigeria during pre-bank consolidation but insignificant during bank consolidation period.

vii. The chow test indicates that there was a structural change during the study period. This structural shift is due to the recapitalization of bank in the Nigerian economy.

Conclusion

The general conclusion that emerges from this study is that financial market capitalization, financial deepening and reforms on the provision of bank credit to the private sectors have the potential to induce Nigeria's economic growth and development during the study period.

Recommendations

Based on findings of the study, the following recommendations are suggested.

i. Banking regulations such as bank consolidation needs to be a component of total reform framework of monetary authority to ensure effectiveness.

In particular, other parameters of bank financial health like the quality of corporate governance, ethics, product development and return rendition should be included in any banking reform for significant result.

ii. Apart from infrastructural deficit, other problems retarding economic growth in Nigeria are the stunted real sector development. With the rising volume of financial resources at the disposal of Nigeria banks as a result of consolidation, necessary strategies should be perfected to design enabling credit facilities whose tenor and terms will provide a symbolic benefit to both the sector business and the banks.

REFERENCES

Balogun, Emmanuel Dele (2007). Banking Sector Reforms and the Nigerian Economy: Performance, pitfalls and future policy options, *Euro journal* 12(45):14

Berger, A.N; R.S Demsetz an P.E Straham (1999). "The Consolidation of Financial services Industry: Causes, consequences and implications for the future: *Journal of Banking and Finance* 23, 135-194

Berger, N Allen (1998). "The Efficiency Effects of Bank Mergers and Acquisition: A preliminary look at the 1990. Data: In bank Mergers and Acquisitions eds. Y Amihud and a Miller. Amsterdamik Academic Publishers.

BIS (2001). Risk Management Principle for Electronic Banking: A bases committee publication 2001.

Damoda, N.G (2007). Basic Econometrics (4th edition). Tata, M.C Grawattillpaffreshing company, New Delhi

Iganiga, B.O. (2010) Evaluation of the Nigerian financial sector Reforms using behavioural models. Ambrose Alli University, Ekpoma, Nigeria.

Iganiga, B.O. and Frances Ngoi Obafemi (2006). The dynamics of the Nigerian Financial bystan structure, product and reforms. Amfitop prints and computers. Lagos.

John Black (2003). Oxford Dictionary of Economics, Oxford University Press, New York Macro-economics. Impact of Bank Capital Requirements in Emerging Economics

JCGIRM Journal of Corporate Governance, Insurance, and Risk Management (JCGIRM)
2015, Volume 2, Series 3

Pages 148-157

CONFLICT RESOLUTION ANALYSIS USING GRAPH MODEL FOR CONFLICT RESOLUTION (GMCR) APPROACH (A CASE STUDY IN CONFLICT AND COOPERATION AGREEMENT BETWEEN IDT AND IDMT)

Chintya Faradita Putri[a,*], **Dini Turipanam Alamanda**[b]

[a] Telecommunication and Informatics Business Management Program Study, Faculty of Economics and Business, Telkom University
[b] A lecture of Economics and Business Faculty, Telkom University

ABSTRACT

This study uses the Graph Model for Conflict Resolution (GMCR) as an approach to describe the optimal solution for resolving the conflict which happened between IDT and its subsidiary IDMT. This conflict arose when IDMT used IDT's 2.1 frequency band.
The main players in the conflict is IDT with its subsidiaries namely IDMT. The other parties involved in the conflict were KTI NGO, Central Jakarta District Court, Attorney General's Office and Policy Institute (MCIT and Administrative Court). The method used in this research is qualitative research that uses literature review as a tool for data collection
Based on the stability analysis, The equilibrium scenario for all the parties in frame I and frame II was the first scenario. The first scenario happened when, KTI NGO reported that there was an alleged misuse of mobile cellular network in the frequency of 2.1 GHz / 3G conducted by IDT and IDMT. IDT and IDMT sent out a counter report stating that they had been extorted by KTI NGO. The Central Jakarta District Court then concluded that KTI NGO had been guilty of extorting IDT and IDMT. However the Attorney General's Office continued their investigation on IDT and IDMT because of their suspected misuse of mobile cellular network and on the Policy Institute who defended IDT and IDMT. Based on the outcome of the conflict as reported on online news portals, it can be concluded there is correlation between the outcome of the conflict and the stable solution (equilibrium) generated through the GCMR approach. The implications of this study can be used as a reference for the Indonesian government and stakeholders in the telecommunications industry to resolve similar conflict in the telecommunications cooperation agreement.

ARTICLE INFO

Keywords:
Conflict Resolution, Graph Model for Conflict Resolution, Telecommunications

**Corresponding author:*
Ciafaraa@gmail.com
(Chintya Faradita Putri)

Article history:

Article Submitted 14-04-2015
Article Accepted 20-06-2015

**Article previously published in EJEM 2015, vol 2, No. 3

1. INTRODUCTION

Based on the survey conducted by the Association of Indonesian Internet Service Provider (APJII) together with the Central Statistics Bureau (BPS) in early 2014 revealed that the number of Internet users in Indonesia has reached 71.19 million people by the end of 2013. That number grew 13 percent compared to the record in late 2012 which is 63 million people. With this amount compared with the total population of the population of Indonesia, the Internet penetration percentage in Indonesia is about 28 percent. APJII judging by these results Indonesian intention to adjust to the demands of the Millennium Development Growth (MDGs) which also agreed with International Telecom Union

(ITU), that in 2015 the population of the earth is to be internet savvy 50 percent has not yet achieved. Then there are two more years to catch up to achieve these targets. (http://www.apjii.or.id accessed on October 3, 2014).

Based on that, there are some stakeholder who can play an active role to make it happen such as the players in Telecom Industry as a network and service provider and also supported by the Government and people of Indonesia itself. In accordance with Article 33 paragraph (2) of the Telecommunications Act number 36 of 1999 which explains that the Internet Service Provider (ISP) can use a network provider's network (both wired network and mobile network) (http://apjii.or.id accessed at dated October 3, 2014). These are reasons for supports and cooperation between providers of telecommunications networks and telecommunications service providers to be able to create an internet savvy society.

One of the form of cooperation agreements that support the provision of internet for internet literacy will be done by IDT as a provider of telecommunications networks and IDMT as telecommunications service providers. Indar Atmanto as the Director of IDMT on 24 November 2006 signed the cooperation agreement between IDT and IDMT on internet access through 3G networks. However, the cooperation agreement turn into a conflict when the KTI NGO led by Denny AK on October 6, 2011 reported allegations of corruption made by IDT and IDMT on the misuse of mobile cellular network 3G radio frequency band to the West Java High Court (http : //news.detik.com accessed on October 3, 2014).

Conflict occurs when there is a disagreement between an individual or group that has a different perception of things. In this case, law enforcement agencies in Indonesia, the Attorney General's Office stated that the cooperation agreement made by IDT and IDMT is not valid in the eyes of the law that set 5 suspects, former Director of IDMT (Indar Atmanto), former Director of IDT (Jhonny Swandi Sjam and Hari Sasongko), and two corporations IDT and IDMT (http://news.liputan6.com accessed on October 3, 2014). It is inversely proportional to the statements and information given by the telecom regulator, namely the Ministry of Communications and Information Technology (Communications) whose are not considered by law enforcement agencies during the judicial process takes place which states that IDT and IDMT cooperation agreement is in accordance with the Telecommunications Act, and there is no obligation to pay IDMT frequency rights fee due to the obligation is IDT’s and it has been paid. This is confirmed by the issuance of a letter 65 / M.KOMINFO / 02/2012 by the Communications and Information Technology as telecommunications regulator stating that there is no violation of law, crimes committed, and losses that result from an agreement between IDT and the IDMT. Furthermore, the Minister of Communications and Information Technology (MCIT) also sent a letter to Attorney General's Office directly stating that

both IDT and IDMT does not violate any rules and cooperation between IDT and IDMT is legal under the rules and regulations in force, and is a common practice in the telecommunications industry. (Annual Report 2013 PT.IDT Tbk accessed on October 3, 2014).

The stipulation has become a major step back for Indonesian intention to adjust to the demands of the Millennium Development Growth (MDGs) which also agreed by International Telecom Union (ITU), that in 2015 the population of the earth is to be 50% internet savvy and has not yet achieved. On the other hand conflict arises when Telecommunications Industry itself still lacks clarity related to their rules. Even in the near future, the Internet in Indonesia is threatened to stop completely. Because the whole internet service provider or ISP in this country do not want to suffer the same fate as Indar Atmanto. They think that what Indar has done is in compliance with the rules and has been deemed lawfully correct by the telecommunications regulator. But in fact, Indar is imprisoned on an agreement which was ruled not appropriate by law enforcement agencies in Indonesia. Conflicts occured with an alleged illegal use over an IDT's 2.1 frequency band by IDMT based on a cooperation agreement between the IDMT represented by Indar Atmanto as the former Director of IDMT with IDT that has go on since 2011, so it can be created a model of resolution to this conflict that can serve as a lesson and won't harm any parties.

There are many ways that can be used in an effort to generate a resolution model of a conflict; one of them is using game theory approach (Game Theory). In line with the development of science, Fang, Hipel and Kilgour (1993) used game theory to model conflict resolution with the known Graph Model for Conflict Resolution (GMCR) which is a new breakthrough to the approach to game theory. GMCR is a methodology for framing an interactive decision or conflict situations, in which the stability analysis can be generated as well as an assessment tool of the best strategies for conflict resolution. In Indonesia, GMCR has been used in a variety of case studies Handayati et al (2011), Alamanda et al (2010,2011,2012,2014), Ariyanto (2013), Husnayain and Alamanda (2014).

In this study, GMCR is used to describe the optimal solution obtained in a conflict that has happened in the agreement between IDT and IDMT seen from the preferences of each party involved in the conflict. The combination of the preferences of each party will result in scenarios which are shadows on the steps taken by each party in a state of conflict. As known by the previous explanation that the conflict of this agreement has resulted in the enactment of five suspects, former Director of IDMT (Indar Atmanto), former Director of IDT (Jhonny Swandi Sjam and Hari Sasongko), and two corporations IDT and IDMT. After going through the process GMCR approach, the correspondence between the steps that should be taken based on the GMCR approach and steps that occur in the real world are taken by each player on this conflict. Therefore, the final results are to know how the

process of cooperation agreement IDT and IDMT conflict that can be used as lessons to learn by the other network providers and services in the Indonesian Telecommunications Industry.

2. LITERATURE REVIEW

Every decision is a matter of a strategic nature. Schwenk in Nooraie (2012: 406) mentions that strategic decision is a structured problem, not routine and important for the company, where top management usually plays a central role (Hofer & Schendel, 1978).

Vahabi (2009: 5) states that from methodology point of view, "strategic conflict" is based on the assumption of rationality and maximizing behavior of players in the conflict. This is about the definition of "strategy". It is assumed that the maximum “rational” value in the mode of behavior, and focuses on the fact that the selection of the "best" in every action depends on what he expects of others are doing, and that "strategic behavior" with regards to influencing the choices of others about how the behavior of other people associated with his behavior (Schelling, 1963: 15). Strategic conflict is trying to catch a "threat" or "potential" of the actual damage in the limited (but not the whole) case. This is the same with saying that the main subject of this theory is "prevention". In addition, the "prevention" is considered as if it composed of rational bargaining while In fact, in this approach the conflict side by side with the interdependency between opponents and partners.

Kilgour, Hipel, Peng, and Fang in Obeidi et al (2002: 147) defines strategic conflict as ".., decision situation involving two or more decision makers (DMS), which make an individual choice which both determine the state, and which have individual preferences over the possible states (as a conflict resolution)."

Xu (2009: 1) states that in order to analyze the strategic conflict means to investigate the interaction of two or more decision makers (DMS) either opposed or partners to identify possible outcomes. There are many models available for strategic conflict, and many ways to analyze the model, including the strategy of the games in game theory, the form of the option, and the form which is closely linked to the table. Madani et al (2008) states that the complexity of the conflict can be simplified and analyzed using game theory to explore a range of potential outcomes resulting from the various strategies used by the players game. In line with the development of science, Fang, Hipel and Kilgour (1993) used game theory to model conflict resolution with the known Graph Model for Conflict Resolution (GMCR) which is a new breakthrough to the approach to game theory. GMCR is based on a mathematical framework that utilizes the concept of graph theory, set theory, and logical reasoning (Fang et al., 1993). The initial idea of GMCR was introduced by Kilgour, Hipel and Fang in 1987, and then it was presented in full for the first time by Fang, Hipel and Kilgour in 1993. GMCR has been applied to various fields of applications, from environmental management for workforce management,

from military activities and peacekeeping to economic issues, from local to international level (Ke, 2007: 1).

GMCR is a methodology for framing an interactive decision or conflict situations, in which the stability analysis can be generated. GMCR, as a tool in the assessment of the best strategies of conflict resolution, also serves as a means of stimulation for the interaction and behaviour of decision makers and can be used in the preparation of mediation and negotiation. GMCR facilitates interested parties to put complex strategic decision problems into a better perspective and understanding of the current situation and imagine the potential resolution (Fang et al, 1993).

3. METHODOLOGY

Ke (2007: 7) states that the GMCR method as a graph model for conflict resolution methodology consists of two stages: modelling and analysis.

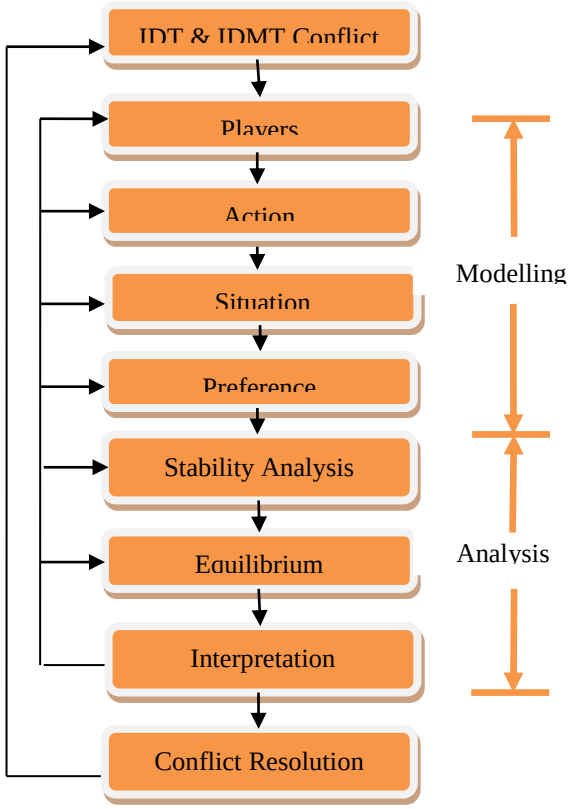

Figure 1: The procedure of GMCR

In modeling stage, issues that become conflicts are generated to be modeled with their basic elements which are decision maker, available option or states-defined option, and preference of decision maker. A decision maker is an individual, group, or organization that is able to make a decision affecting other decision makers in a conflict. Condition outlook is obtained from an option given in accordance with action taken based on available condition called option. The decision maker then chooses feasible

state based on the collected options. Feasible state is a chosen scenario among a number of scenarios that may happen. The number of scenarios obtained is defined as 2^n, where 2 is the probability of "Yes" (Y) and "No" (N) and n is filled by a number of available options. However, not all of states may be appropriate. Therefore, modeling stage is important to eliminate states that are not appropriate. Those options are then ranked based on the likeable things preferred by the decision maker, which is called preference of decision maker. The information will be used in the next stage, which is analysis stage (Ke: 2007)

In analysis stage, the stability of each condition is calculated based on each decision maker' view. Afterwards, the whole stability of stable conditions can be obtained. The preference is important information required as input for the stability analysis using a variety of solution concepts. The concepts of the solution used are indicated using the letters (r) for Nash stable scenario and (s) for stable sequential scenario and (u) for unstable scenarios. Next step is to see any scenario that is eventually equilibrium for all those indicated by the letter (E).

After the stability being analyzed, the next stage will be sensitivity analysis. Sensitivity analysis is an analysis for finding out what will happen to the decision makers if they move from one state (usually from state status quo) to another. In several application somebody may use sensitivity to decide how the preference of decision maker must change to deliver the more wanted equilibria for other decision makers. The result can be said as equilibria if it is a stable condition for all parties. With interpretation and sensitivity analysis, decision makers or other interested parties can understand the meaning of the resolution of conflicts in the real world. To be noticed is that the presence of feedback is allowed on GMCR procedure. Feedback means any stage, either at the modeling stage or analysis stage, can go back to the previous point, if found new information. These characteristics make GMCR more flexible and practical (Ke: 2007).

4. DISCUSSION & RESULT

Based on secondary data sources adapted to the purpose of this study which is to determine how the process of conflict and cooperation agreement between IDT and IDMT that can be used as a lessons learn for the network providers and services in the Indonesian telecommunications industry, the last status (status quo) on conflict of cooperation agreement between IDT and IDMT is presented in Table 1 below:

Table 1. Status Quo

Frame	*Players*	Oprtion	
I	KTI NGO	Reporting suspected abuse of mobile cellular network frequency of 2.1 GHz / 3G conducted by IDT and IDMT	Y

	IDT and IDMT	Reporting Extortion by KTI NGO	Y
II	Central Jakarta District Court	Establishing KTI NGO as guilty	Y
	Attorney General's Office	Establishing IDT and IDMT as a suspect	Y
	Policy Institute	Protecting IDT and IDMT	Y

After determining the players, options and categorized them based on the situation of conflict (frame), the researchers can determine a feasible framework states that may occur. Based on the previously mentioned and assessed scenarios on secondary data sources from multiple online news portal, there are only 3 scenarios in the frame I and 5 scenarios on the frame II considered feasible by the researcher. Here are the scenarios and options of each player which are considered:

Table 2. Feasible State Frame I

No	Option	Scenario		
		1	2	3
	KTI NGO			
1.	Reporting suspected abuse of mobile cellular network frequency of 2.1 GHz / 3G conducted by IDT and IDMT	Y	N	Y
	IDT and IDMT			
2.	Reporting Extortion by KTI NGO	Y	N	N

Table 3. Feasible State Frame II

No	Option	Scenario				
		1	2	3	4	5
	Central Jakarta District Court					
1.	Establishing KTI NGO as guilty	Y	Y	N	N	N
	Attorney General's Office					
2.	Establishing IDT and IDMT as a suspect	Y	N	N	Y	N
	Policy Institute					
3.	Protecting IDT and IDMT	Y	Y	N	Y	Y

The next step of the modeling process of GMCR is sorting scenario which reflects preference of each player / decision maker. Preferences are the tendency of players. In writing, the more to the left, the higher the preference is for the player. Such scenarios are sorted by rank of the most desirable scenario on the left to the least preferred scenarios on the right. This preference is important information that is required as input for the stability analysis using a variety of solution concepts.

Furthermore, it is checked which scenarios are the equilibrium or stable and acceptable to all parties that can be used as a conflict resolution of cooperation agreement conflict between IDT and IDMT and is marked with the letter E. A state is considered stable for decision makers if and only if (IFF) decision makers are not tempted to move away from their uniterally. A state is said equlibrium, or resolution may be a solution of choice concept, if all the decision makers find stability under the concept of solution. The concept of stability analysis used in this study is only nash stable (r), sequential stable (s) and unstable (u) because only those three conditions occur during the stability analysis. Nash stable occurs when a player does not change position due to other positions are not higher than its payoff in the current position. Sequential stable occurs when a player does not change position due to considering the steps of the opponent, and the opponent is not much better than its payoff in the current position. The unstable occurs when players switch positions to better position that has a higher payoff than its current position.

Here are the results of stability analysis on conflict and cooperation agreement between IDT and IDMT presented in Table 4:

Tabel 4. Results of Stability Analysis

FRAME I				**FRAME II**					
KTI NGO				**Central Jakarta District Court**					
			E		E				
Stability	r	u	r	*Stability*	r	r	u	u	r
State Ranking	3	2	1	*State Ranking*	1	2	4	5	3
Uis		3		*Uis*			1	2	
IDT and IDMT				**Attorney General's Office**					
		E			E				
Stability	r	r	u	*Stability*	r	r	u	u	r
State Ranking	2	1	3	*State Ranking*	1	4	2	5	3
Uis			1	*Uis*			1	4	
				Policy Institute					
								E	
				Stability	r	r	s	r	r
				State Ranking	2	5	3	1	4
				Uis			5		

In Table 4 it can be seen that the equilibrium scenario for all parties in the frame I is the scenario 1 when KTI NGO reports alleged misuse of mobile cellular network frequency of 2.1 GHz / 3G conducted by IDT and IDMT followed by IDT and IDMT that also report extortion by KTI NGO.

While in the frame II, the equilibrium scenario for all parties is the scenario 1 when the Central Jakarta District Court sets KTI NGO guilty, Attorney General's Office sets IDT and IDMT as suspect and Policy Institute that defends IDT IDMT.

The next step is sensitivity analysis used to answer the question "what if?" In some applications, one may use sensitivity analysis to determine how the preferences of decision makers should be changed in order to produce a more desirable equilibria for other decision makers. These results can be said as equilibria if it is a stable situation for all parties. Or in other words, a sensitivity analysis is conducted when there are two or more equilibrium scenarios to find which one is the best scenario for all parties. And in this study, as it has been obtanined previously in the analysis of the stability that equilibrium or stable scenarioes on the basis of nash for all parties in the frame I and the frame II is scenario 1 so it can be concluded that it is not necessary to have a sensitivity analysis because there is only one equilibrium scenario.

5. CONCLUSION

Based on the results of the analysis it is indicated that the stability of the equilibrium scenario for all parties in the frame I is the scenario I when KTI NGO report alleged misuse of mobile cellular network frequency of 2.1 GHz / 3G conducted by IDT and IDMT and followed by IDT and IDMT reporting extortion conducted by NGO KTI. While in the frame II, the equilibrium scenario for all parties is the scenario 1 when Central Jakarta District Court sets KTI NGO guilty, Attorney General's Office sets IDT and IDMT as suspect and also Policy Institute that defend IDT and IDMT.

In this research, GMCR is used to describe the optimal solution obtained in a conflict that has happened in the agreement between IDT and IDMT viewed from the options and preferences of each party involved in this conflict. Therefore, after going through the process of GMCR approach, it will be seen the correspondence between the steps that should be taken based on the results of the approach of GMCR method and steps occur in the real world taken by the respective players based on the outcome of the conflict as reported on online news portals. The implications of this study can be used as a reference for the Indonesian government and stakeholders in the telecommunications industry to resolve similar conflict in the telecommunications cooperation agreement.

REFERENCES

Annual Report IDT 2012-2013[Accessed: September. 23, 2014]

Asosisasi Penyelenggara Jasa Internet Indonesia, "Klarifikasi Status Kerjasama ISP dan Penyelenggara Jaringan". www.apjii.or.id, September. 23, 2014. [Online]. Available: http://apjii.or.id/v2/upload/Arsip/Surat%20APJII_Kominfo_Kasus%20IDMT.pdf [Accessed: September. 28, 2014]

Fang, L., Keith, W. H., & Marc, K. (1993). *Interactive Decision Making – The Graph Model for Conflict Resolution*, New York: Wiley.

Ferdinan (June. 13, 2014), "Pledoi Mantan Dirut IDMT Singgung Laporan Bermotif Pemerasan" www.detik.com [Online]. Available: http://news.detik.com/read/2013/06/13/104944/2272157/10/forum.detik.com/pledoi-mantan-dirut-IDMT-singgung-laporan-bermotif-pemerasan [Accessed: September. 28, 2014]

Husnayain, A. Ihdal dan Dini Alamanda Turipanam (2014). *Plan's Conflict in Gedebage Bandung Using Graph Model For Conflict Resolution (GMCR).* Emerging Trends In Academic Research ETAR (C) Global Illuminators, Bali, Indonesia [Online]. Available:http://www.globalilluminators.org/wp-content/uploads/2014/12/ETAR-14-285.pdf [Accessed: February. 11, 2014]

Ke, Yi Ginger (2007). Preference Elicitation in The Graph Model for Conflict Resolution. Tesis Program Magister University of Waterloo, Ontario, Canada.

Madani, Kaveh., David Rheinheimer, Laila Elimam, dan Christina Connel-Buck (2009). A Game Theory Approach to Understanding the Nile River Basin Conflict. International Journal of World Environmental and Water Resources Congress

Merdeka.com (January. 15, 2014*)*. Jumlah Pengguna Internet Indonesia capai 71,19 juta pada 2013. www.apjii.or.id [Online]. Available:http://www.apjii.or.id/v2/read/article/apjii-at-media/219jumlah-pengguna-internet-indonesia-capai-7119-juta.html [Accessed: September. 28, 2014]

Noorie, Mahmood (2012). Factors Influencing Strategic Decision-Making Processes, International Journal of Academic Research in Business and Social Sciences July 2012, Vol. 2, No. 7, 406-407.

Pangabean, Edward (September. 16, 2014). Jaksa Eksekusi Eks Dirut IDMT ke Penjara Sukamiskin. news.liputan6.com [Online]. Available: http://news.liputan6.com/read/2106174/jaksa-eksekusi-eks-dirut-IDMT-ke-penjara-sukamiskin [Accessed: December. 11, 2014]

Suryadhi, Ardhi (February. 7, 2013). Gugat BPKP PTUN Kabulkan Permohonan IDT IDMT. inet.detik.com [Online]. Available: http://inet.detik.com/read/2013/02/07/171018/2164137/328/gugat-bpkp-ptun-kabulkan-permohonan-IDT--IDMT [Accessed: September. 19, 2014]

Suryadi, Ardhi (May. 1, 2014). PTUN Audit BPKP di Kasus IDMT IDT Cacat Hukum inet.detik.com [Online]. Available: http://inet.detik.com/read/2013/05/01/133920/2235171/328/ptun-audit-bpkp-di-kasus-IDMT-IDT-cacat-hukum [Accessed: September. 19, 2014]

Vahabi, Mehrdad (2012). A Critical Review of Strategic Conlict Theory and Socio-political Instability Models, A paraître dans Revue d'Economie Politique, Vol. 119, No. 6, 2009, 5